ABBA LinearTech

Linear Motion

technology

www.abbatech.com.tw

ABBA LinearTech

Headquarter

No. 75 Chung-Shan Rd.,

Tu-Cheng Industrial District, Taipei County, Taiwan

TEL : 886-2-2268-1133

FAX : 886-2-2267-0907

E-mail : abba@abbatech.com.tw

Website : www.abbatech.com.tw

agent

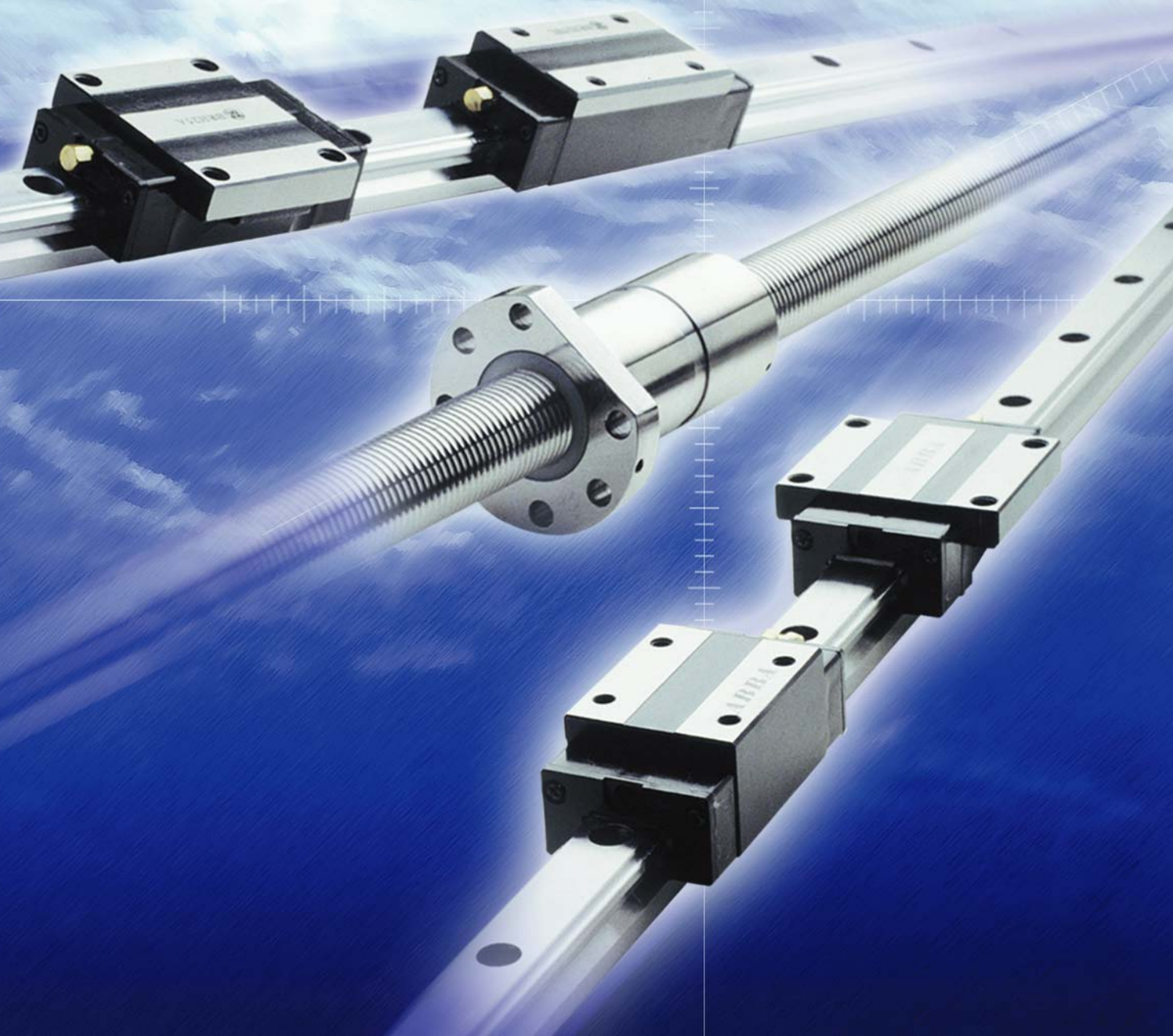

ABBA Linear Tech, established in 1999, was the first professional linear guideway manufacturer in Taiwan putting patent self-lubricant and four-row linear guides into mass production. Having accumulated 18-year experience of making precise ball screws, ABBA Linear Tech possessed critical techniques, combined R&D achievements with National Taiwan University of Technology and Science, and launched the production successfully in 2000. With several international patents, ABBA is thriving worldwide with its own name and having channels in Taiwan, China, Korea, Japan, Europe, America, etc.

Since the beginning, ABBA Linear Tech has been making every endeavor on both marketing and product quality, and was recognized by The Creative Innovation Prize, The Rising Star Award, The National Business Start-up Award, and The Taiwan Symbol of Excellence in 2002 and 2004. Besides, ABBA obtained an investment approval in accordance with the encouragement to significant strategic industries by the Industrial Development Bureau of the Ministry of Economic Affairs. What ABBA strived for in the past four years has been identified and supported by clients, suppliers, and the academia.

In 2004 ABBA Linear Tech set up a global operation center and R&D department in the Ta-Tung Industrial Park to devote to the technological research of high-precise transmission components. Meanwhile, it is always ABBA's spirit to offer the best quality and professional service in order to integrate the global operation resources, fulfill clients' demand, and become a high-class linear guideway supplier within the coming five years.

SYMBOL OF EXCELLENCE

It's Very Well Made In Taiwan

Rising Star Award

National Business Start-up Award

ISO9001:2000

Certificates of Patents

Award of Creative Innovation Prize

ABBA LinearTech

INDEX

Agility

Beyond

Brilliant

Ambition

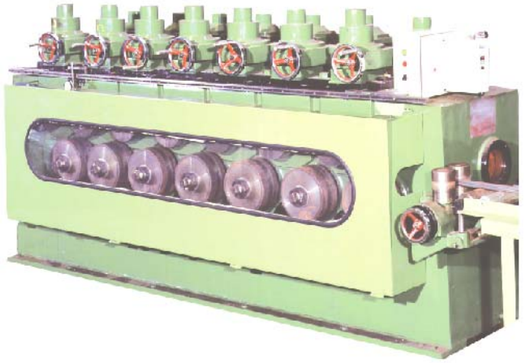

High Precise

CNC Production Equipments

The characteristics and advantages of ABBA Self-Lubricant Linear Guideway

Ten Characteristics

- Built-in long life lubrication (patent)
- Equivalent loading capacity in four directions
- Smooth running due to new ball re-circulation (patent)
- High rigidity : 4-row angular contact
- International standard dimension
- High accuracy, Low friction, Low maintenance
- High speed, low noise
- Integral all-round sealing
- Interchangeability
- Green production

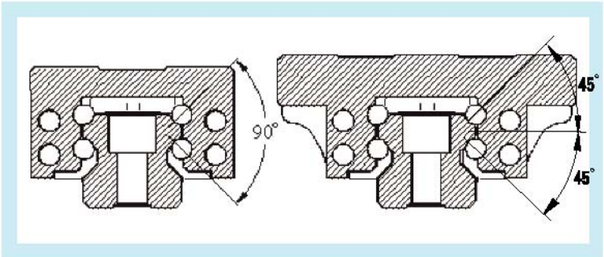

Four Advantages of Self-Lubricant Block

Advantage1:

Maintenance free - No need for frequent periodic lubrication or automatic lubrication systems.

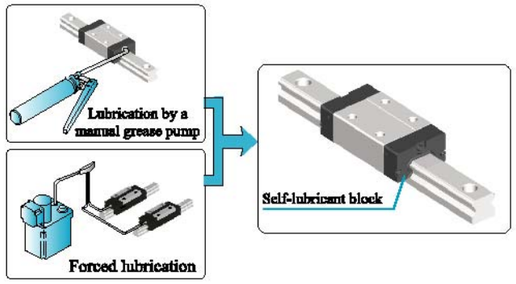

Advantage2:

Extended intervals between maintenance.

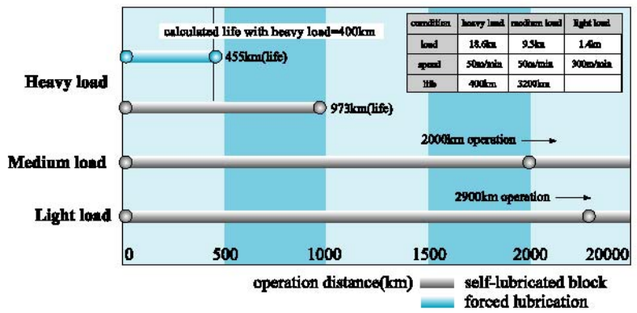

condition	heavy load	medium load	light load
load	18.6kn	9.3kn	1.4kn
speed	50m/min	50m/min	300m/min
life	400km	3200km	

Advantage3:

Curtailing lubrication cost.

Forced lubrication:0.03cc/6min X 8h/day X 276day X 1year=662cc
Operation distance=3500km/year

Advantage4:

No oil leakage concern, easy for cleaning.

The Model Code of ABBA Self- Lubricant Linear Guideway

BRH 25 A 2 L 500 E P Z1 AT K II

- II — Two sets per axis
- K — Bottom-Hole Rail(optional design)
- AT — Accessory Code
- Z1 — Preload
- P — Precision
- E — Rail special machining E:w/ No mark:w/o
- L 500 — Rail length
- 2 — Block No. per rail
- A — Flange type
- 25 — Size
- BRH — Type code

Type Code	
BRH:	International Standard
BRS:	Low assembly
BRX:	Special design

Flange type			
A :	With flange	AL :	Long type with flange
B :	Without flange	BL :	Long type without flange
C :	Through hole with flange	CL :	Long type through hole with flange
AS :	Short type with flange	BS :	Short type without flange
CS :	Short type through hole with flange		

Size	Accessory Code		Precision		Preload	
15	A:	With top seal & side seal (applicable to BR20, 25, 30)	N:	Normal	ZF:	Clearance
20	B:	With metal scrappers	H:	High	Z0:	Nopreload
25	C:	With top seal, side seal, and metal scrappers	P:	Precision	Z1:	Light preload
30	T:	With oil tank on one end	SP:	Super-precision	Z2:	Medium preload
35	U:	With oil tank on both ends	UP:	Ultra-precision	Z3:	Heavy preload
45						

e.g. BRH 30 BL 2 L300 P Z0 AT K II

AT — with top seal, side seal, and oil tank on one end.

- Remark : Size 55 is only available in the BC series.
- Remark : BR35 and BR45 are not equipped with self-lubricant parts.

The Model Code of ABBA Steel Cover Strip

BR 25 C 1

- 1 — Quantity
- C — C - Steel Cover Strip, F - Handle, G - Side Cover
- 25 — Size : 15, 20, 25, 30, 35, 45, 55
- BR — Series : BR series, BC series

e.g. BR 30 F 2

F — Handle

Interchangeability Notice

BRH-A & BRH-AL

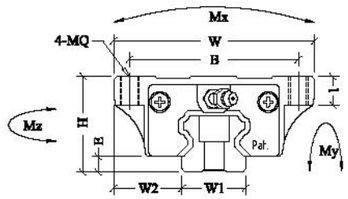

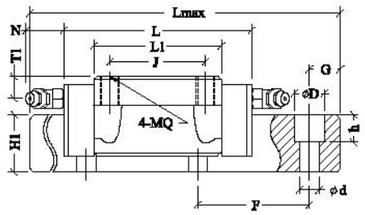

1. Check the mounting height (H)
2. Check the mounting width (W)
3. Check the block length(L)
4. Check the block's body size (L1)
5. Check the hole Diameter and pitches on the block (BXJ)
6. Check the rail width(W1)
7. Check the pitch of the rail (F)
8. Check the hole Diameter and rail size (d X D X h)
9. When a specific length is required, please advise the (G) values in your order.

Accuracy Selection

We have five grades for your selection:

Normal/ High/ Precision/ Super-Precision/ Ultra Precision

	Application	Accuracy Grade				
		N	H	P	SP	UP
NC Machine tools	Machining Center			○	○	
	Lathe			○	○	
	Milling Machine			○	○	
	Boring Machine			○	○	○
	Jig Borer				○	○
	Grinding Machine			○	○	○
	Electro-discharge Machine (EDM)		○	○		
	Punching Press Machine		○	○		
	Laser Cutting Machine	○	○	○		
	Wood Working Machine	○	○	○		
	NC Drilling Machine		○	○		
	Milling Center		○	○		
	Packaging Machine	○				
	ATC	○				
	Wire Cut Machine		○	○		
	Grinding Wheel Machine			○	○	

	Application	Accuracy Grade				
		N	H	P	SP	UP
Industrial Robots	Orthogonal Type	○	○			
	Multi-joint Type	○	○			
Semiconductor Machine	Wire Bonder		○	○		
	Prober			○	○	
	Inserter Machine	○	○			
	PCB Driller	○	○	○		
Other Machines	Injection Molding Machine Three-Dimension	○	○			
	Measuring Machine			○	○	
	Business Machine	○	○			
	Transporting Machine	○	○			
	X-Y Table	○	○	○		
	Painting Machine	○	○			
	Welding Machine	○	○			
	Medical Equipments	○	○			
	Digitizer	○	○	○		
	Test Equipments		○	○	○	

Accuracy Standard

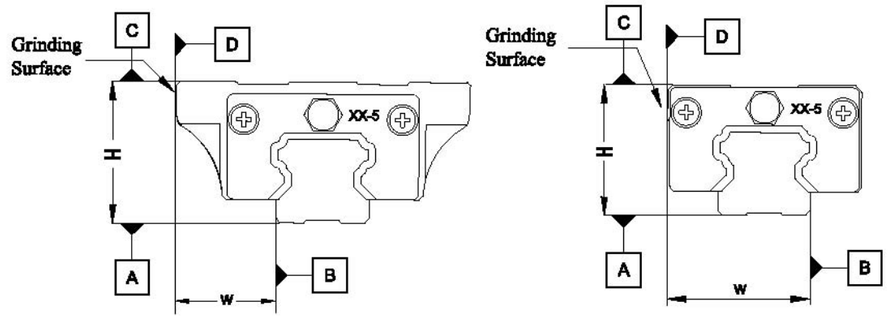

Unit : mm

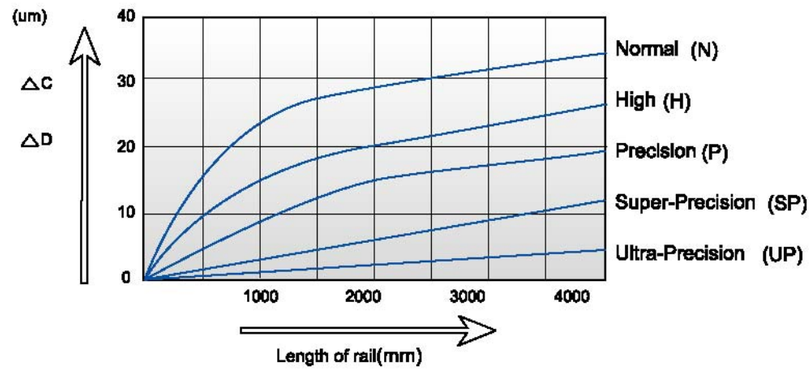

Fig.1 BR rail length and running parallelism

ITEM	GRADE				
	Normal (N)	High (H)	Precision (P)	Super-Precision (SP)	Ultra-Precision (UP)
Tolerance of height(H)	±0.1	±0.04	0 -0.04	0 -0.02	0 -0.01
Tolerance of width(W)	±0.1	±0.04	0 -0.04	0 -0.02	0 -0.01
Difference of heights(△H)	0.03	0.02	0.01	0.005	0.003
Difference of widths(△W)	0.03	0.02	0.01	0.005	0.003
Running parallelism of BR Block between surface A & C	△C Refer to Fig.1				
Running parallelism of BR Block between surface B & D	△D Refer to Fig.1				

Suggestion in Assembly

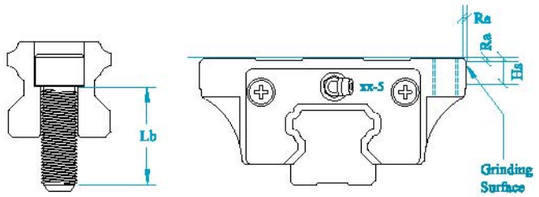

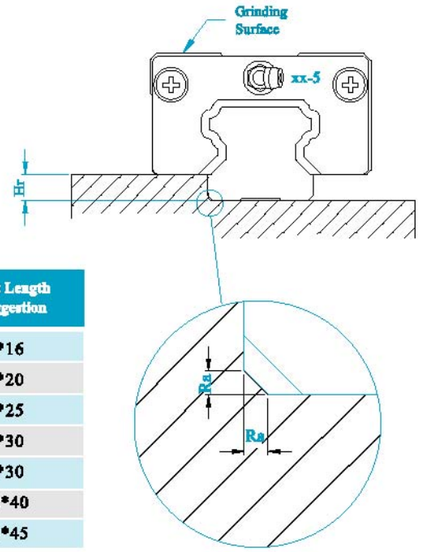

ITEM	Maximum Fillet (Ra)	Maximum Height (Hr) rail shoulder	Maximum Height (Hs) block shoulder	Rail Bolt Length (Lb) suggestion
BR-15	0.8	4	5	M4*16
BR-20	0.8	4.5	6	M5*20
BR-25	1.2	6	7	M6*25
BR-30	1.2	8	8	M8*30
BR-35	1.2	8.5	9	M8*30
BR-45	1.6	12	11	M12*40
BR-55	1.6	13	12	M14*45

Unit : mm

Preload grade

Basic static load rating: C0

We define the basic static load rating C0 as a static load of constant magnitude acting in one direction under which the sum of the permanent deformations of rolling elements and raceway equals 0.0001 times of the diameter of the rolling elements.

Basic dynamic load rating: C

When each group of identical linear motion system is applied independently under the same condition, basic dynamic load rating C is the load of constant magnitude acting in one direction that results in a nominal life of 50 km.

GRADE	ITEM	
	Symbol	Preload force
Clearance	ZF	0
No Preload	Z0	0
Light Preload	Z1	0.02 C
Middle Preload	Z2	0.05 C
Heavy Preload	Z3	0.07 C

Static safety coefficient : fs

Static safety factor fs is the ratio of the basic static load rating C0 to the load acting on the linear motion system.

fs = (fc * C0) / P or fs = (fc * M0) / M

fs : static safety factor fc : Contact factor

C0 : basic static load rating M0 : static permissible moment

P : design load M : design moment

Reference value of static safety factor fs shown below :

Operating condition	Load condition	Minimum fs
Normally stationary	Small impact and deflection	1.0 ~ 1.3
	Impact or twisting load is applied	2.0 ~ 3.0
Normally moving	Small impact or twisting load is applied	1.0 ~ 1.5
	Impact or twisting load is applied	2.5 ~ 5.0

Contact coefficient : fc

In linear motion system, it is hard to obtain identical load distribution due to moments, errors and other factors on the mounting surfaces. When multiple blocks on a rail are used in close contact, the basic load ratings C and C0 corresponding with contact coefficients are shown below.

Number of blocks in close contact	Contact factor
2	0.81
3	0.72
4	0.66
5	0.61
Normal operation	1

Hardness coefficient : fh

For linear motion system, its optimum load carrying capacity is HRC 58 to 64 hardness on the raceways.

If the hardness is under HRC 58, both the basic dynamic load rating and basic static load rating should be multiplied by hardness coefficient fh.

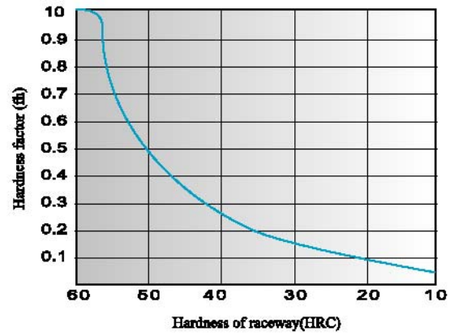

Temperature coefficient : ft

When a linear motion system is subject to temperature above 100°C, the temperature factor should be taken into consideration.

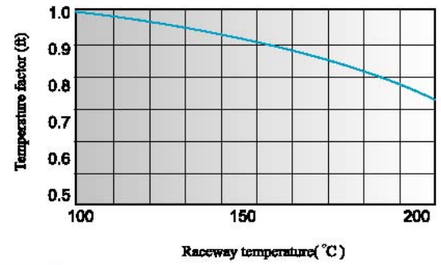

Note 1: When being used in the environment over 80°C, the seals and end plates should be designed for high temperature operation.

Note 2: When used in above 120°C, special treatment should be designed for stabilizing the dimension.

Load coefficient : fw

Impacts and vibrations	Speed (V)	Measured vibration (G)	fw
Without external Impacts or Vibrations	At low speed V<=15m/min	G<=0.5	1~1.5
Without significant Impacts or Vibrations	At medium speed 15<V<=60m/min	0.5<G<=1.0	1.5~2.0
With external Impacts or Vibrations	At high speed V>60m/min	1.0<G<=2.0	2.0~3.5

Formula of nominal life : L

Given the basic dynamic load rating C and the applied load P, the following formulas shows the nominal life L of a linear motion system using steel balls.

$$L = \left(\frac{fh * fT * fc}{fw} * \frac{C}{P} \right)^3 * 50$$

L : nominal life

C : basic dynamic load rating

P : applied load

fh : Hardness factor

fT : Temperature factor

fc : Contact factor

fw : Load factor

Grease Nipples

NLA01

Application	15		20	—	25	—	30	—	35	—	45	—
Metal Scraper	15		20	—	25	—	30	—	35	—	45	—

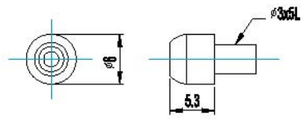

NLB01

Application	15	—	20		25		30		35		45	—
Metal Scraper	15	—	20		25		30		35		45	—

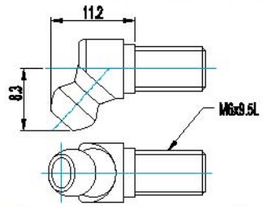

NLC02

Application	15	—	20	—	25		30		35		45	—
Metal Scraper	15	—	20		25		30		35		45	—

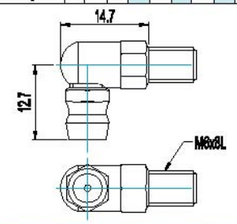

NLA02

Application	15		20		25	—	30	—	35	—	45	—
Metal Scraper	15		20		25	—	30	—	35	—	45	—

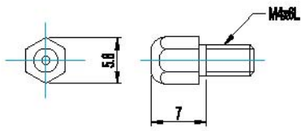

NLB02

Application	15	—	20		25		30		35		45	—
Metal Scraper	15	—	20	—	25	—	30		35		45	—

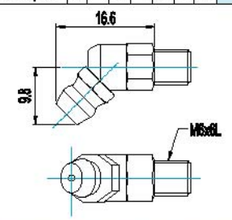

NLC03

Application	15	—	20	—	25	—	30	—	35	—	45	
Metal Scraper	15	—	20	—	25	—	30	—	35	—	45	

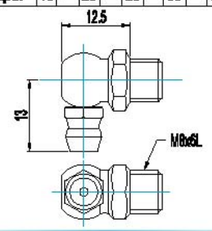

NLA03

Application	15	—	20		25		30		35	—	45	—
Metal Scraper	15	—	20	—	25	—	30		35	—	45	—

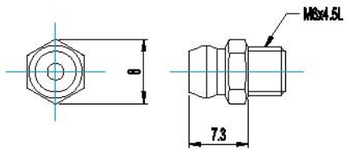

NLB03

Application	15		20	—	25		30		35		45	—
Metal Scraper	15		20		25		30		35		45	—

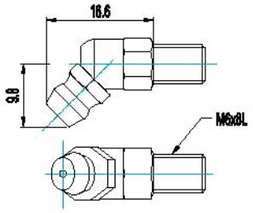

NPA01

Application	15	—	20	—	25		30		35		45	—
Metal Scraper	15	—	20	—	25	—	30	—	35	—	45	—

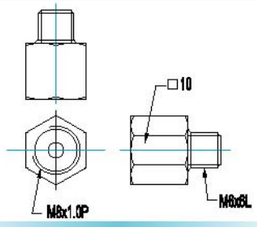

NLA04

Application	15	—	20	—	25		30		35		45	—
Metal Scraper	15	—	20		25		30		35		45	—

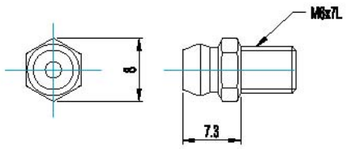

NLB04

Application	15	—	20	—	25	—	30	—	35	—	45	
Metal Scraper	15	—	20	—	25	—	30	—	35	—	45	

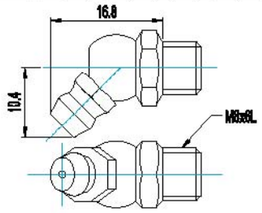

NPA02

Application	15	—	20	—	25	—	30	—	35	—	45	
Metal Scraper	15	—	20	—	25	—	30	—	35	—	45	

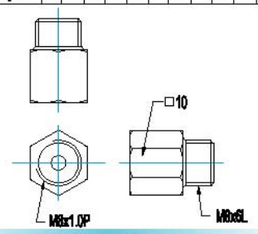

NLA05

Application	15	—	20	—	25	—	30		35		45	—
Metal Scraper	15	—	20	—	25		30		35		45	—

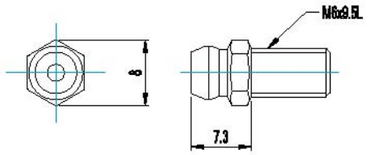

NLC01

Application	15	—	20		25		30		35		45	—
Metal Scraper	15	—	20	—	25	—	30		35		45	—

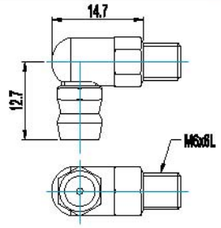

NPA03

Application	15	—	20	—	25	—	30		35		45	—
Metal Scraper	15	—	20	—	25	—	30		35		45	—

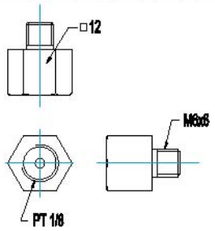

NPA04

Application	15	—	20	—	25	—	30	—	35	—	45	
Metal Scraper	15	—	20	—	25	—	30	—	35	—	45	

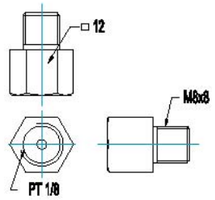

NPC04

Application	15	—	20	—	25	—	30	—	35	—	45	
Metal Scraper	15	—	20	—	25	—	30	—	35	—	45	—

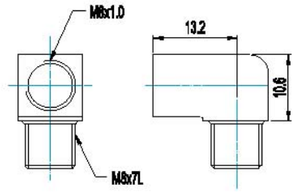

NPC08

Application	15	—	20	—	25		30		35		45	
Metal Scraper	15	—	20	—	25		30	—	35	—	45	

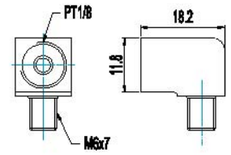

NPC01

Application	15	—	20	—	25	—	30		35		45	—
Metal Scraper	15	—	20	—	25	—	30		35		45	—

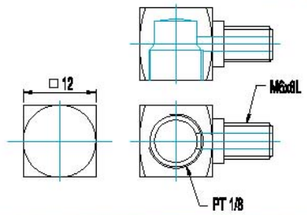

NPC05

Application	15	—	20	—	25	—	30	—	35	—	45	
Metal Scraper	15	—	20	—	25	—	30	—	35	—	45	

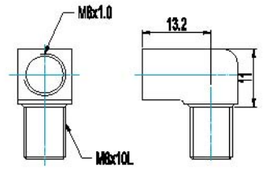

NAC01

Application	15		20	—	25	—	30	—	35	—	45	—
Metal Scraper	15	—	20	—	25	—	30	—	35	—	45	—

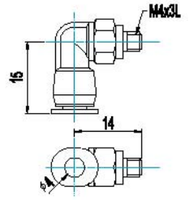

NPC02

Application	15	—	20		25		30		35		45	—
Metal Scraper	15	—	20	—	25		30	—	35	—	45	—

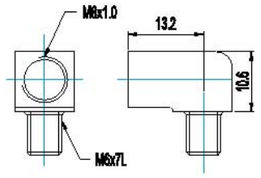

NPC06

Application	15	—	20	—	25	—	30	—	35	—	45	
Metal Scraper	15	—	20	—	25	—	30	—	35	—	45	—

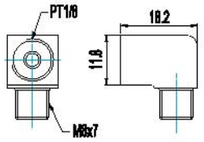

NAC02

Application	15	—	20		25		30		35		45	—
Metal Scraper	15	—	20	—	25	—	30		35		45	—

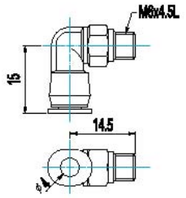

NPC03

Application	15	—	20	—	25	—	30		35		45	—
Metal Scraper	15	—	20	—	25		30		35		45	—

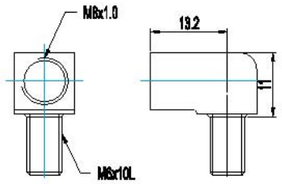

NPC07

Application	15	—	20	—	25	—	30	—	35	—	45	
Metal Scraper	15	—	20	—	25	—	30	—	35	—	45	

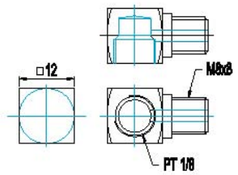

Grease Nipple	
NL	Grease Nipple
NP	Plumbing Nipple
NA	Quick joint

Angle	
A	0°
B	45°
C	90°

NOTE : — Inappropriate

Appropriate

Shall you have any question , please kindly contact ABBA.

Frictional resistance

The frictional resistance can be calculated in the following formula.

$$F = u * W + f$$

F : frictional resistance W : load

u : coefficient of friction f : seal resistance

u : Coefficient of friction

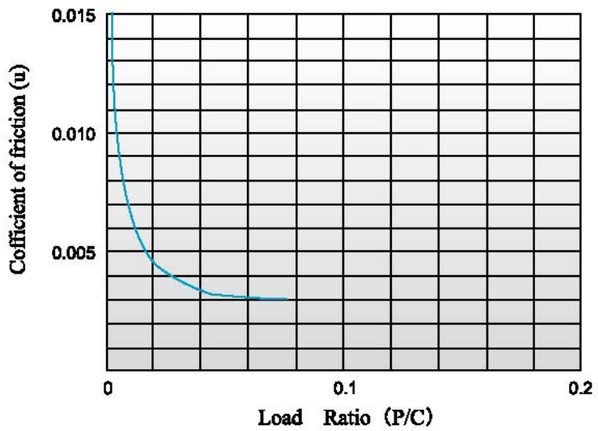

P : Load

C : Basic Dynamic Load Rating

f : Seal resistance

Unit:kgf

Model No.	resistance	Model No.	resistance
BR 15	0.3	BR 35	0.7
BR 20	0.4	BR 45	0.9
BR 25	0.4	BR 55	1.0
BR 30	0.5		

Lubricant Category

General Environment

	ABBA P/N	Application
1	GNA	Load (Light/Medium) Temperature-20℃~130℃
2	GNB	Load (Medium/Heavy)
3	GNC	Load (Heavy) Temperature-20℃~130℃

Clean Room

	ABBA P/N	Application
1	GCA	Load (Light/Medium) High speed Temperature-50℃~150℃~
2	GCB	Load (Medium/Heavy) High speed Temperature-50℃~150℃~
3	GCC	Load (Heavy) Temperature-40℃~200℃

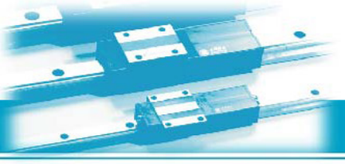

BRH-A&AL

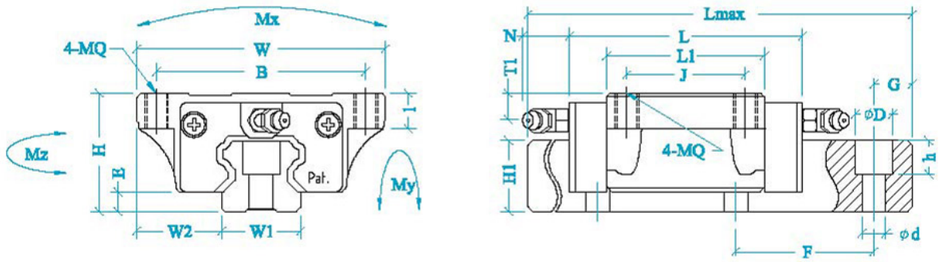

Model No.	Assembly (mm)				BR block (mm)							BR rail (mm)			
	H	W	W2	E	L	BXJ	MQXℓ	L1	Oil hole	T1	(N)	W1	H1	F	dXDXh
BRH15A	24	47	16	4.6	66	38X30	M5X8	40	Ø3	4.3	5	15	14	60	4.5X7.5X5.3
BRH20A	30	63	21.5	5	77.8	53X40	M6X9	48.8	M6X1	5	6.5	20	18	60	6X9.5X8.5
BRH20AL					92.4			63.4							
BRH25A	36	70	23.5	7	88	57X45	M8X12	57	M6X1	5	6.5	23	22	60	7X11X9
BRH25AL					110.1			79.1							
BRH30A	42	90	31	9	109	72X52	M10X12	72	M6X1	7	6.5	28	26	80	9X14X12
BRH30AL					131.3			94.3							
BRH35A	48	100	33	9.5	109	82X62	M10X13	80	M6X1	8	6.5	34	29	80	9X14X12
BRH35AL					134.8			105.8							
BRH45A	60	120	37.5	14	138.2	100X80	M12X15	105	M8X1	10	13	45	38	105	14X20X17
BRH45AL					163			129.8							

Model No.	Ref.Data (mm)		Basic Load Rating (Kgf)		Static Moment (Kgf*m)			Weight	
	Lmax	G	(C)	(CO)	Mx	My	Mz	Block(Kgf)	Rail(Kgf/M)
BRH15A	4000	20	850	1650	10	8	8	0.21	1.4
BRH20A	4000	20	1450	2560	22	18	18	0.4	2.6
BRH20AL			1900	3330	28.6	23.4	23.4	0.52	
BRH25A	4000	20	2140	4000	36	32	31	0.57	3.6
BRH25AL			2996	5600	50.4	44.8	43.4	0.72	
BRH30A	4000	20	2980	5490	60	50	49	1.1	5.2
BRH30AL			3900	7190	78.5	65	65	1.4	
BRH35A	4000	20	3960	7010	96	75	73	1.6	7.2
BRH35AL			5230	9270	125	95	95	2	
BRH45A	4000	22.5	6740	12100	216	170	168	2.7	12.3
BRH45AL			8330	14950	267	210	210	3.6	

- Please refer to the 「Assembly Suggestions」 for screw specification.
- The dimension G is customized. With no specific request, the G values on both ends will be the same.

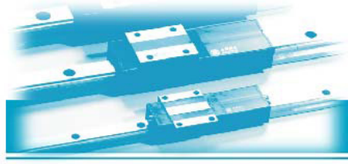

BRH-B&BL

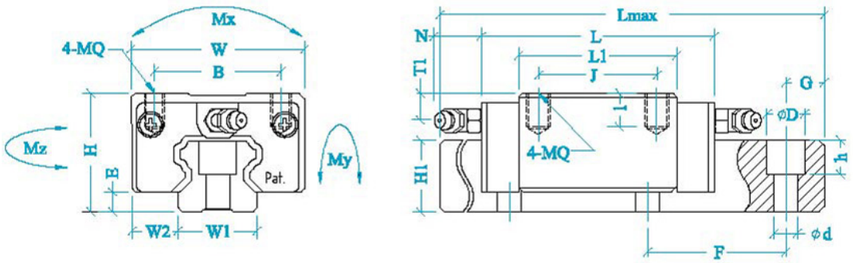

Model No.	Assembly (mm)				BR block (mm)							BR rail (mm)			
	H	W	W2	E	L	BXJ	MQXℓ	L1	Oil hole	T1	(N)	W1	H1	F	dXDXh
BRH15B	28	34	9.5	4.6	66	26X26	M4X6.4	40	Ø3	8.3	5	15	14	60	4.5X7.5X5.3
BRH20B	30	44	12	5	77.8	32X36	M5X8	48.8	M6X1	7	6.5	20	18	60	6X9.5X8.5
BRH20BL					92.4	32X50		63.4							
BRH25B	40	48	12.5	7	88	35X35	M6X9.6	57	M6X1	11.8	6.5	23	22	60	7X11X9
BRH25BL					110.1	35X50		79.1							
BRH30B	45	60	16	9	109	40X40	M8X12.8	72	M6X1	10	6.5	28	26	80	9X14X12
BRH30BL					131.3	40X60		94.3							
BRH35B	55	70	18	9.5	109	50X50	M8X12.8	80	M6X1	15	6.5	34	29	80	9X14X12
BRH35BL					134.8	50X72		105.8							
BRH45B	70	86	20.5	14	138.2	60X60	M10X16	105	M8X1	18	13	45	38	105	14X20X17
BRH45BL					163	60X80		129.8							

Model No.	Ref.Data (mm)		Basic Load Rating (Kgf)		Static Moment (Kgf*m)			Weight	
	Lmax	G	(C)	(CO)	Mx	My	Mz	Block(Kgf)	Rail(Kgf/M)
BRH15A	4000	20	850	1650	10	8	8	0.19	1.4
BRH20A	4000	20	1450	2560	22	18	18	0.31	2.6
BRH20AL			1900	3330	28.6	23.4	23.4	0.47	
BRH25A	4000	20	2140	4000	36	32	31	0.45	3.6
BRH25AL			2996	5600	50.4	44.8	43.4	0.56	
BRH30A	4000	20	2980	5490	60	50	49	0.91	5.2
BRH30AL			3900	7190	78.5	65	65	1.2	
BRH35A	4000	20	3960	7010	96	75	73	1.5	7.2
BRH35AL			5230	9270	125	95	95	1.9	
BRH45A	4000	22.5	6740	12100	216	170	168	2.3	12.3
BRH45AL			8330	14950	267	210	210	2.8	

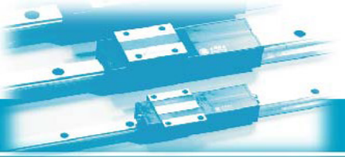

BRS-B&BS&BL

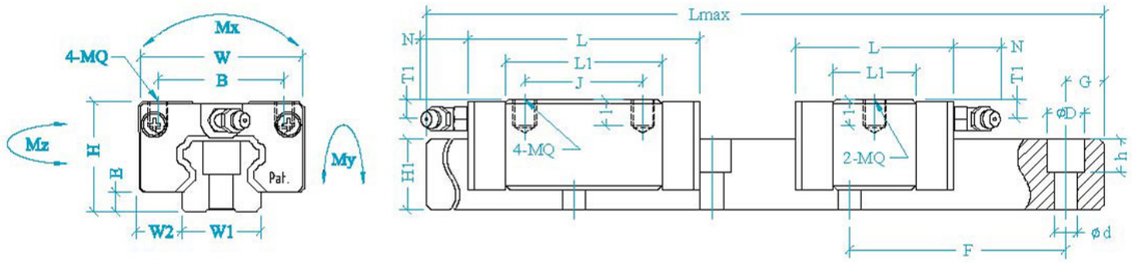

Model No.	Assembly (mm)				BR block (mm)										BR rail (mm)
	H	W	W2	E	L	BXJ	MQXℓ	L1	Oil hole	T1	(N)	W1	H1	F	dXDXh
BRS15B	24	34	9.5	4.6	66	26X26	M4X5.6	40	Ø3	4.3	5	15	14	60	4.5X7.5X5.3
BRS15BS					47.6	26X -		21.6							
BRS20B	28	42	11	5	77.8	32X32	M5X7	48.8	M6X1	5	6.5	20	18	60	6X9.5X8.5
BRS20BS					57	32X -		28							
BRS25B	33	48	12.5	7	88	35X35	M6X8.4	57	M6X1	4.8	6.5	23	22	60	7X11X9
BRS25BS					62.5	35X -		31.5							
BRS25BL					110.1	35X50		79.1							
BRS30B	42	60	16	9	109	40X40	M8X11.2	72	M6X1	7	6.5	28	26	80	9X14X12
BRS30BS					75.6	40X -		38.6							
BRS30BL					131.3	40X60		94.3							
BRS35B	48	70	18	9.5	109	50X50	M8X11.2	80	M6X1	8	6.5	34	29	80	9X14X12
BRS35BS					74.7	50X -		45.7							
BRS35BL					134.8	50X72		105.8							
BRS45B	60	86	20.5	14	138.2	60X60	M10X14	105	M8X1	8.5	13	45	38	105	14X20X17
BRS45BL					163	60X80		129.8							

Model No.	Ref.Data (mm)		Basic Load Rating (Kgf)		Static Moment (Kgf*m)			Weight	
	Lmax	G	(C)	(C0)	Mx	My	Mz	Block(Kgf)	Rail(Kgf/M)
BRS15B	4000	20	850	1650	10	8	8	0.17	1.4
BRS15BS			510	950	6	4.8	4.8	0.1	
BRS20B	4000	20	1450	2560	22	18	18	0.26	2.6
BRS20BS			830	1470	12.6	10.3	10.3	0.17	
BRS25B	4000	20	2140	4000	36	32	31	0.38	3.6
BRS25BS			1190	2230	20	17.5	17.2	0.21	
BRS25BL			2996	5600	50.4	44.8	43.4	0.53	
BRS30B	4000	20	2980	5490	60	50	49	0.81	5.2
BRS30BS			1595	2940	32	27	27	0.48	
BRS30BL			3900	7190	78.5	65	65	1.06	
BRS35B	4000	20	3960	7010	96	75	73	1.2	7.2
BRS35BS			2260	4000	54.5	42.5	41.5	0.8	
BRS35BL			5230	9270	125	95	95	1.6	
BRS45B	4000	22.5	6740	12100	216	170	168	2.1	12.3
BRS45BL			8330	14950	267	210	210	2.6	

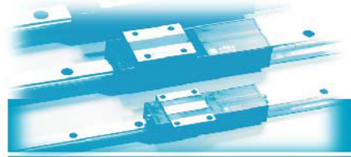

BRH-C&CL

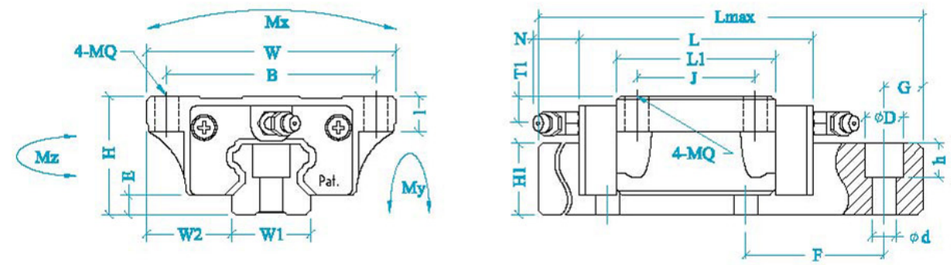

Model No.	Assembly (mm)				BR block (mm)							BR rail (mm)			
	H	W	W2	E	L	BXJ	ØQXℓ	L1	Oil hole	T1	(N)	W1	H1	F	dXDXh
BRH15C	24	47	16	4.6	66	38X30	Ø4.5X8	40	Ø3	4.3	5	15	14	60	4.5X7.5X5.3
BRH20C	30	63	21.5	5	77.8	53X40	Ø5.5X9	48.8	M6X1	5	6.5	20	18	60	6X9.5X8.5
BRH20CL					92.4			63.4							
BRH25C	36	70	23.5	7	88	57X45	Ø 7X12	57	M6X1	5	6.5	23	22	60	7X11X9
BRH25CL					110.1			79.1							
BRH30C	42	90	31	9	109	72X52	Ø 9X12	72	M6X1	7	6.5	28	26	80	9X14X12
BRH30CL					131.3			94.3							

Model No.	Ref.Data (mm)		Basic Load Rating (Kgf)		Static Moment (Kgf*m)			Weight	
	Lmax	G	(C)	(C0)	Mx	My	Mz	Block(Kgf)	Rail(Kgf/M)
BRH15C	4000	20	850	1650	10	8	8	0.21	1.4
BRH20C	4000	20	1450	2560	22	18	18	0.4	2.6
BRH20CL			1900	3330	28.6	23.4	23.4	0.52	
BRH25C	4000	20	2140	4000	36	32	31	0.57	3.6
BRH25CL			2996	5600	50.4	44.8	43.4	0.72	
BRH30C	4000	20	2980	5490	60	50	49	1.1	5.2
BRH30CL			3900	7190	78.5	65	65	1.4	

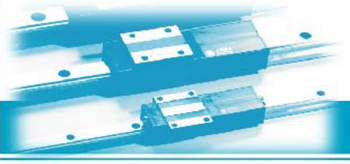

BRS-A&AS

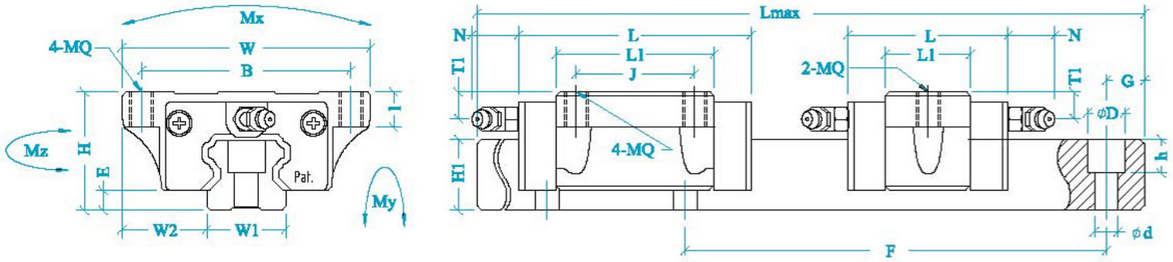

Model No.	Assembly (mm)				BR block (mm)							BR rail (mm)			
	H	W	W2	E	L	BXJ	MQXℓ	L1	Oil hole	T1	(N)	W1	H1	F	dXDXh
BRS20AS	28	59	19.5	5	57	49	M6X7	28	M6X1	5	6.5	20	18	60	6X9.5X8.5
BRS25A	33	73	25	7	88	60X35	M8X9	57	M6X1	4.8	6.5	23	22	60	7X11X9
BRS25AS					62.5	60		31.5							

Model No.	Ref.Data (mm)		Basic Load Rating (Kgf)		Static Moment (Kgf*m)			Weight	
	Lmax	G	(C)	(CO)	Mx	My	Mz	Block(Kgf)	Rail(Kgf/M)
BRS20AS	4000	20	830	1470	12.6	10.3	10.3	0.17	2.6
BRS25A	4000	20	2140	4000	36	32	31	0.5	3.6
BRS25AS			1190	2230	20	17.5	17.2	0.33	

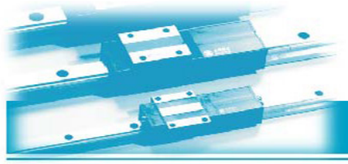

BRX-B&BL

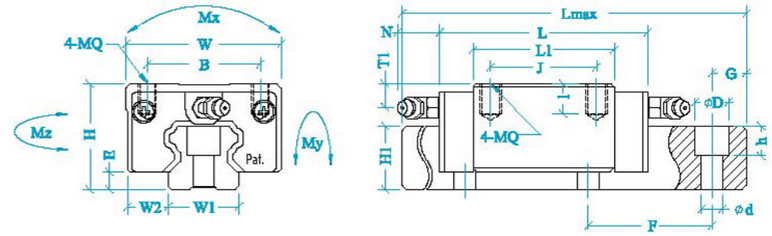

Model No.	Assembly (mm)				BR block (mm)							BR rail (mm)			
	H	W	W2	E	L	BXJ	MQXℓ	L1	Oil hole	T1	(N)	W1	H1	F	dXDXh
BRX25B	36	48	12.5	7	88	35X35	M6X9.6	57	M6X1	5	6.5	23	22	60	7X11X9
BRX25BL					110.1	35X50		79.1							

Model No.	Ref.Data (mm)		Basic Load Rating (Kgf)		Static Moment (Kgf*m)			Weight	
	Lmax	G	(C)	(CO)	Mx	My	Mz	Block(Kgf)	Rail(Kgf/M)
BRX25B	4000	20	2140	4000	36	32	31	0.4	3.6
BRX25BL			2996	5600	50.4	44.8	43.4	0.5	

BRS-C&CS

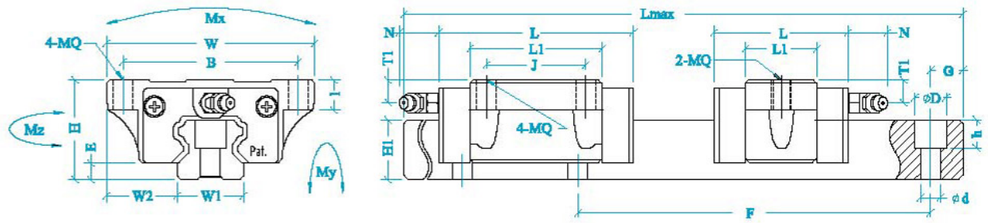

Model No.	Assembly (mm)				BR block (mm)							BR rail (mm)			
	H	W	W2	E	L	BXJ	ØQXℓ	L1	オイルホール	T1	(N)	W1	H1	F	dXDXh
BRS20CS	28	59	19.5	5	57	49	Ø5.5X7	28	M6X1	5	6.5	20	18	60	6X9.5X8.5
BRS25C	33	73	25	7	88	60X35	Ø7X9	57	M6X1	4.8	6.5	23	22	60	7X11X9
BRS25CS					62.5	60		31.5							

Model No.	Ref.Data (mm)		Basic Load Rating (Kgf)		Static Moment (Kgf*m)			Weight	
	Lmax	G	(C)	(CO)	Mx	My	Mz	ブロック(Kgf)	レール(Kgf/M)
BRS20CS	4000	20	830	1470	12.6	10.3	10.3	0.17	2.6
BRS25C	4000	20	2140	4000	36	32	31	0.5	3.6
BRS25CS			1190	2230	20	17.5	17.2	0.33	

Oil Tank

PATENT

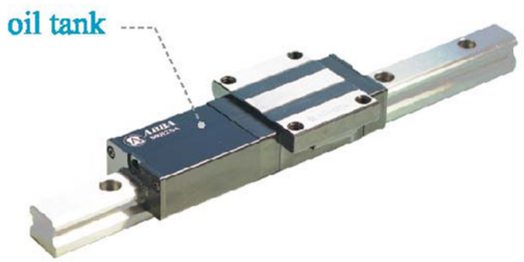

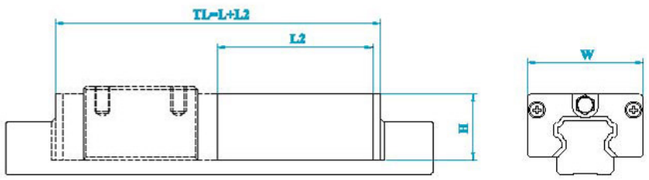

Model No.	Block Dimension(mm)			Tank Capacity
	W	H	L2	cc
BR15T	33	19	45	7.36
BR20T	41	22.5	50	11.42
BR25T	46.8	25.5	60	18.3
BR30T	55.5	31.5	70	40.91
BR35T	68.8	37.5	80	58.36
BR45T	84	45	100	117.46

Long Service Life

World patent designs of oil tank.
No lubrication piping work and units is required.

Environmental

No oil leakage.
Keep the surroungings of machines and equipments clean.

Cost-saving

Save the cost of lubricant through eliminating waste.
Long intervals between maintenance, reducing the cost for repair.

Life Time				Adapted Type
	Load	Speed	Life Time	
Heavy Load	18.6kN	50m/min	1100km	All BR Series
Medium Load	9.3kN	60m/min	8700km	
Light Load	1.4kN	300m/min	30000km	
Note	If using in special environment, please contact ABBA.			

Remark : For any furthur information, please contact ABBA.

Steel Cover Strip

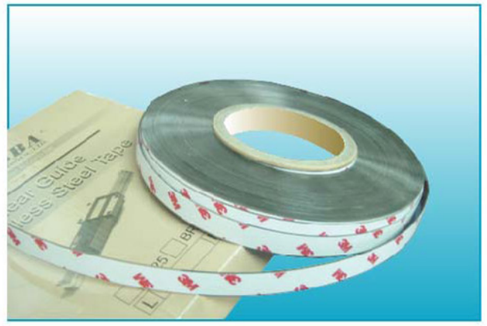

Dust-proof

State-of-the-art design

Sturdy and Durable

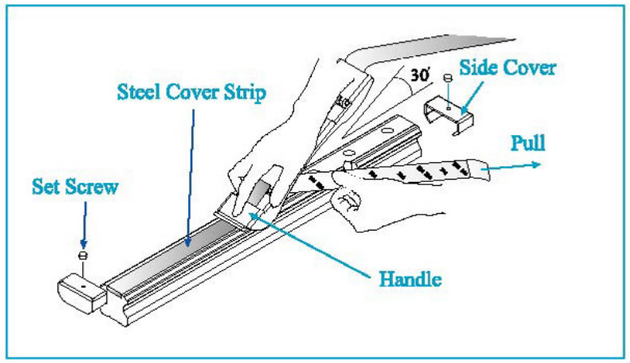

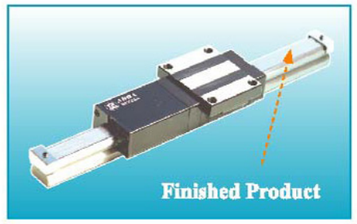

Type Code	Cover Strip Dimension(mm)			Note
	W	L	T	
BR15	10	50M	0.3	1.Supplied in boxes in 50M per bundle. 2.Can be cut off into needed length by yourself.
BR20	13			
BR25	15			
BR30	20			
BR35	24			
BR45	32			

Remark : For any detail of assembly procedure, please refer to the instruction on the box, or contact ABBA.

Ball Screw

High Precision

CNC Production Equipments

The Model Number Coding of ABBA Ball Screw

SFT	R	025	05	B	2	D	G	C5	1000	P0
Nut type codes	Direction of helix	Shaft dia.(mm)	Lead(mm)	No. of Turn(Circuits) or Turn x Row		Flange type	Process code	Accuracy grade code	Overall length of shaft(mm)	Axial clearance and preload code

Nut type codes								
S	S :	Single nut	F	F :	With flange	T	T :	T type nut
							I :	I type nut
							D :	D type nut
	D :	Double nut		C :	Without flange		E :	E type nut
							K :	K type nut
							U :	U DIN nut

(SFI 、 DFI 、 SFT 、 DFT 、 SFE 、 SFK)

Direction of helix	
R :	Right
L :	Left

No. of Turn (Circuits) or Turn x Row		
Turn	T:	1
	A:	1.5 (or 1.7)
	B:	2.5
	C:	3.5

ex : (B2=2.5x2)

Flange type	
N:	Not cutting
S:	Single cutting
D:	Double cutting

Process code	
G:	Ground
F:	Rolled

Accuracy grade code						
C0	C1	C2	C3	C5	C7	C10

Axial clearance and preload code						
P0	P1	P2	P3	P4		

Mean Travel Deviation (±E) and Travel Varition(e) (JIS B 1192)

unit:μm

Grade			C0		C1		C2		C3		C5		C7	C10
Travel Length (mm)	Over	incl	±E	e	±E	e	±E	e	±E	e	±E	e	e300	e300
		100	3	3	3.5	5	5	7	8	8	18	18		
	100	200	3.5	3	4.5	5	7	7	10	8	20	18		
	200	315	4	3.5	6	5	8	7	12	8	23	18		
	315	400	5	3.5	7	5	9	7	13	10	25	20		
	400	500	6	4	8	5	10	7	15	10	27	20		
	500	630	6	4	9	6	11	8	16	12	30	23		
	630	800	7	5	10	7	13	9	18	13	35	25		
	800	1000	8	6	11	8	15	10	21	15	40	27		
	1000	1250	9	6	13	9	18	11	24	16	46	30		
	1250	1600	11	7	15	10	21	13	29	18	54	35	±50 / 300mm	±210 / 300mm
	1600	2000			18	11	25	15	35	21	65	40		
	2000	2500			22	13	30	18	41	24	77	46		
	2500	3150			26	15	36	21	50	29	93	54		
	3150	4000			30	18	44	25	60	35	115	65		
	4000	5000					52	30	72	41	140	77		
	5000	6300					65	36	90	50	170	93		
	6300	8000							110	60	210	115		
	8000	10000									260	140		
	10000	12500									320	170		

Variation per 300mm (e_{300}) and Wobble Error (e_{2}) (JIS B 1192)

unit:μm

Grade	C0	C1	C2	C3	C5	C7	C10
e_{300}	3.5	5	7	8	18	50	210
$e_{2\pi}$	2.5	4	5	6	8		

Combination of Accuracy Grade, Preload and Axial Play

Grade	P0	P1	P2	P3	P4
Axial Play	Yes	No	No	No	No
Preload	No	No	Light	Medium	Heavy

Guidelines for selecting Accuracy, Preload, Axial Play, Nut and Screw shaft.

Accuracy	Preload and Axial Play	Nut Type	Screw shaft Type
C10	P0(With Axial Play)	Single Nut	Rolled screw shaft
C7	P1 or P0	Ground : According to ABBA Catalogues Rolled : single nut	Rolled or Ground
C5	P1 or P2(Standard)	Ground : According to ABBA Catalogues Rolled : single nut	Ground screw shaft with lead error inspection certificate
C3	P1 or P2(Standard) or P3	Ground : According to ABBA Catalogues Rolled : single nut	Ground screw shaft with lead error inspection certificate

Axial Play (P0)
Clearance in the Axial Direction of the Rolled and Ground Ball Screw

Screw Shaft OD	Rolled Ball Screw Clearance in the Axial Direction(max.)	Groung Ball Screw Clearance in the Axial Direction (max.)
04-14 miniature ball screw	0.05	0.015
15-40 middle size of ball screw	0.08	0.025
50-100 big size of ball screw	0.12	0.05

Spring Force of Light Preload (P2)

unit:kg

Model No	Single Nut (kg)	Double Nut (kg)
1605	0.1~0.3	0.3~0.6
2005	0.1~0.3	0.3~0.6
2505	0.2~0.5	0.3~0.6
3205	0.2~0.5	0.5~0.8
4005	0.2~0.5	0.5~0.8
2510	0.2~0.5	0.5~0.8
3210	0.3~0.6	0.5~0.8
4010	0.3~0.6	0.5~0.8
5010	0.3~0.6	0.8~1.2
6310	0.6~1.0	0.8~1.2
8010	0.6~1.0	0.8~1.2

TYPE:SFI

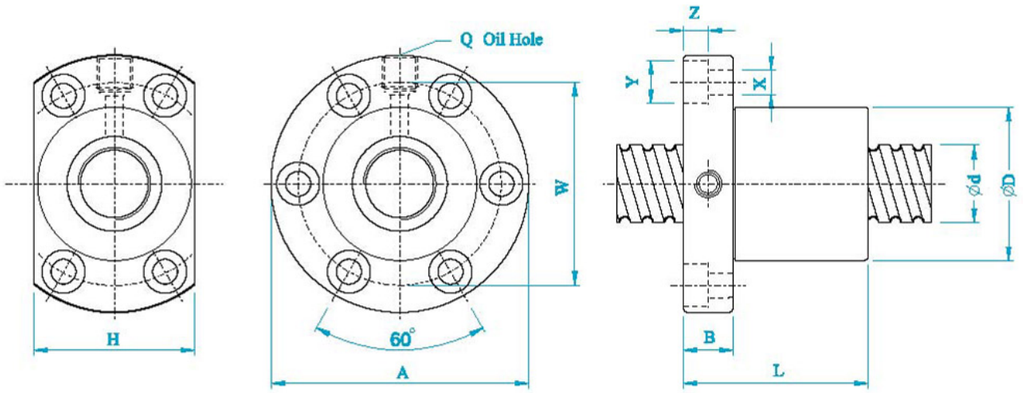

Unit: mm

I : Load Da : Ball Dia n : Number of Circuits K : Stiffness(Kg/μm) Ca : Basic dynamic Rating Load (Kgf) Coa : Basic Static Rating Load(Kgf)

Model No.	Dimensions																
	d	I	Da	D	A	B	L	W	H	X	Y	Z	Q	n	Ca	Coa	K
SFI1604-4	16	4	2.381	30	49	10	45	39	34	4.5	8	4.5	M6	4	640	1340	16
SFI1605-4		5	3.175	30	49	10	50	39	34	4.5	8	4.5	M6	4	780	1790	20
★ SFI1610-3		10	3.175	34	58	10	57	45	34	5.5	9.5	5.5	M6	3	833	1249	15
SFI2004-4	20	4	2.381	34	57	11	46	45	40	5.5	9.5	5.5	M6	4	670	1480	25
★ SFI2005-4		5	3.175	34	57	11	51	45	40	5.5	9.5	5.5	M6	4	1130	2380	25
★ SFI205T-4		5.08	3.175	34	57	11	51	45	40	5.5	9.5	5.5	M6	4	1130	2380	25
SFO2504-4	25	4	2.381	40	63	11	46	51	46	5.5	9.5	5.5	M6	4	760	1950	31
★ SFI2505-4		5	3.175	40	63	11	51	51	46	5.5	9.5	5.5	M6	4	1280	3110	35
SFI2510-4		10	4.762	46	72	12	85	58	52	6.5	11	6.5	M6	4	1944	3877	33
SFI3204-4	32	4	2.381	46	72	12	47	58	52	6.5	11	6.5	M6	4	860	3050	40
★ SFI3205-4		5	3.175	46	72	12	52	58	52	6.5	11	6.5	M8	4	1450	4150	40
SFI3210-4		10	6.35	54	88	15	90	70	62	9	14	8.5	M8	4	3390	7170	40
★ SFI4005-4	40	5	3.175	56	90	15	55	72	64	9	14	8.5	M8	4	1610	5330	49
★ SFI4010-4		10	6.35	62	104	18	93	82	70	11	17.5	11	M8	4	3910	9520	50
SFI5010-4	50	10	6.35	72	114	18	93	92	82	11	17.5	11	M8	4	4450	12500	65
★ SFI6310-4	63	10	6.35	85	131	22	98	107	95	14	20	13	M8	4	5070	16600	80
★ SFI8010-4	80	10	6.35	105	150	22	98	127	115	14	20	13	M8	4	5620	21300	90

Note:with sign ★ can produce left helix

TYPE:DFI

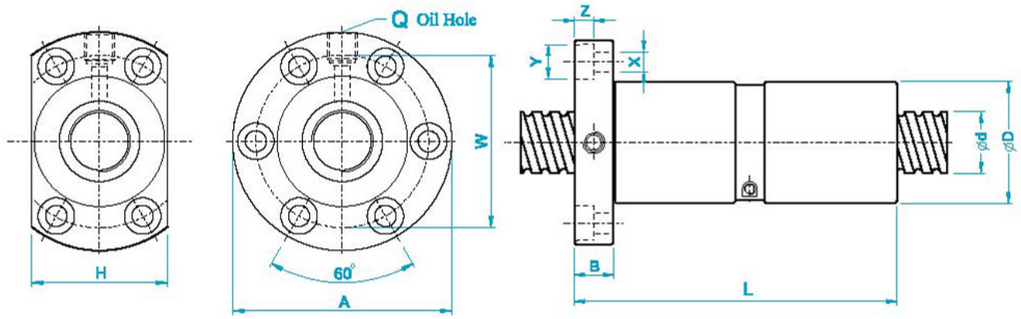

Unit: mm

I : Load Da : Ball Dia n : Number of Circuits K : Stiffness(Kg/μm) Ca : Basic dynamic Rating Load (Kgf) Coa : Basic Static Rating Load(Kgf)

Model No.	Dimensions																
	d	I	Da	D	A	B	L	W	H	X	Y	Z	Q	n	Ca	Coa	K
DFI1604-4	16	4	2.381	30	49	10	80	39	34	4.5	8	4.5	M6	4	640	1340	35
DFI1605-4		5	3.175	30	49	10	100	39	34	4.5	8	4.5	M6	4	780	1790	36
DFI2004-4	20	4	2.381	34	57	11	80	45	40	5.5	9.5	5.5	M6	4	670	1480	41
★ DFI2005-4		5	3.175	34	57	11	101	45	40	5.5	9.5	5.5	M6	4	1130	2380	45
DFI2504-4	25	4	2.381	40	63	11	80	51	46	5.5	9.5	5.5	M6	4	760	1950	48
★ DFI2505-4		5	3.175	40	63	11	101	51	46	5.5	9.5	5.5	M8	4	1280	3110	63
DFI2510-4		10	4.762	46	72	12	145	58	52	6.5	11	6.5	M6	4	1944	3877	65
DFI3204-4	32	4	2.381	46	72	12	80	58	52	6.5	11	6.5	M6	4	860	3050	56
★ DFI3205-4		5	3.175	46	72	12	102	58	52	6.5	11	6.5	M8	4	1450	4150	72
DFI3210-4		10	6.35	54	88	15	162	70	62	9	14	8.5	M8	4	3390	7170	72
★ DFI4005-4	40	5	3.175	56	90	15	105	72	64	9	14	8.5	M8	4	1610	5330	98
★ DFI4010-4		10	6.35	62	104	18	165	82	70	11	17.5	11	M8	4	3910	9520	90
DFI5010-4	50	10	6.35	72	114	18	171	92	82	11	17.5	11	M8	4	4450	12500	117
★ DFI6310-4	63	10	6.35	85	131	22	182	107	95	14	20	13	M8	4	5070	16600	114
★ DFI8010-4	80	10	6.35	105	150	22	182	127	115	14	20	13	M8	4	5620	21300	162

Note:with sign ★ can produce left helix

TYPE:SFU(DIN 69051 FORM B)

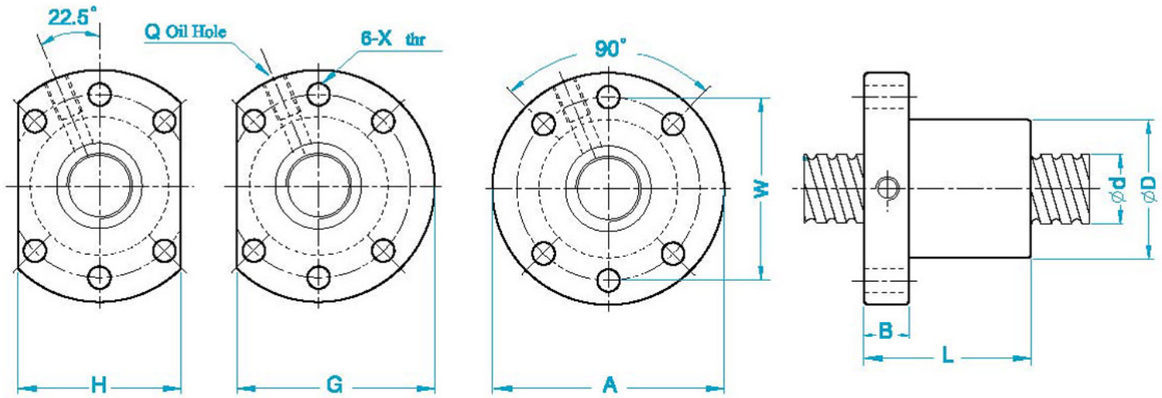

Unit: mm

I : Load Da : Ball Dia n : Number of Circuits K : Stiffness(Kg/μm) Ca : Basic dynamic Rating Load (Kgf) Coa : Basic Static Rating Load(Kgf)

Model No.	Dimensions															
	d	I	Da	D	A	B	L	W	X	G	H	Q	n	Ca	Coa	K
SFU1604-4	16	4	2.381	28	48	10	40	38	5.5	44	40	M6	4	629	1270	35
SFU1605-4		5	3.175	28	48	10	50	38	5.5	44	40	M6	4	780	1790	20
★ SFU1610-3		10	3.175	28	48	10	57	38	5.5	44	40	M6	3	721	1249	15
SFU-2004-4	20	4	2.381	36	58	10	42	47	6.6	51	44	M6	4	699	1617	41
★ SFU-2005-4		5	3.175	36	58	10	51	47	6.6	51	44	M6	4	1130	2380	25
SFU-2504-4	25	4	2.381	40	62	10	42	51	6.6	55	48	M6	4	777	2052	48
★ SFU-2505-4		5	3.175	40	62	10	51	51	6.6	55	48	M6	4	1280	3110	35
SFU-2506-4		6	3.969	40	62	10	54	51	6.6	55	48	M6	4	1528	3284	40
SFU-2508-4		8	4.762	40	62	10	63	51	6.6	55	48	M6	4	1941	3863	38
SFU-2510-4		10	4.762	40	62	12	85	51	6.6	55	48	M6	4	1944	3877	33
SFU-3204-4	32	4	2.381	50	80	12	44	65	9	71	62	M6	4	871	2661	56
★ SFU-3205-4		5	3.175	50	80	12	52	65	9	71	62	M6	4	1450	4150	40
SFU-3206-4		6	3.969	50	80	12	57	65	9	71	62	M6	4	1720	4298	47
SFU-3208-4		8	4.762	50	80	12	65	65	9	71	62	M6	4	2189	5079	44
SFU-3210-4		10	6.350	50	80	12	90	65	9	71	62	M6	4	3390	7170	79
SFU-3220-3		20	3.969	50	80	12	99	65	9	71	62	M6	3	1354	3283	52
★ SFU-4005-4	40	5	3.175	63	93	14	55	78	9	81.5	70	M8	4	1610	5330	49
SFU-4006-4		6	3.969	63	93	14	60	78	9	81.5	70	M6	4	1911	5458	55
SFU-4008-4		8	4.762	63	93	14	67	78	9	81.5	70	M6	4	2435	6469	52
SFU-4010-4		10	6.350	63	93	14	93	78	9	81.5	70	M8	4	3910	9520	50
SFU-5010-4	50	10	6.350	75	110	16	93	93	11	97.5	85	M8	4	4450	12500	65
★ SFU-6310-4	63	10	6.350	90	125	18	98	108	11	110	95	M8	4	5070	16600	80
★ SFU-8010-4	80	10	6.350	105	145	20	98	125	13.5	127.5	110	M8	4	5620	21300	90

Note:with sign ★ can produce left helix

TYPE:DFU(DIN 69051 FORM B)

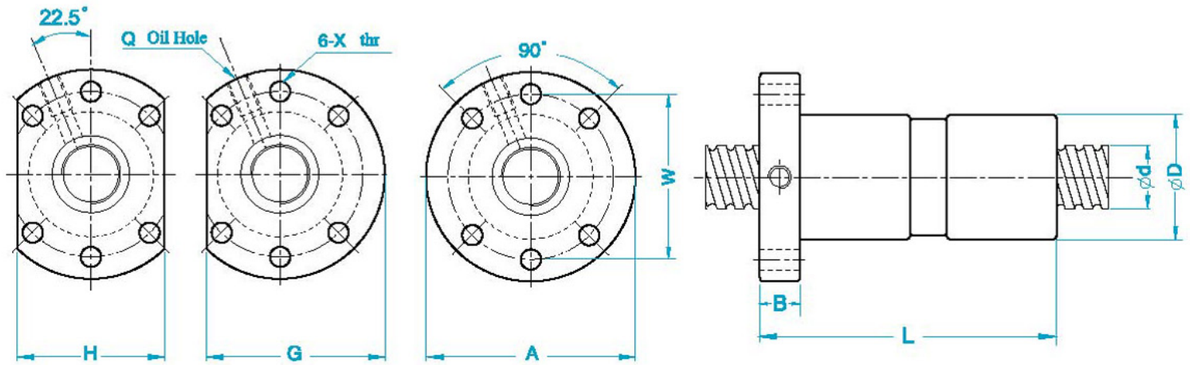

Unit: mm

I : Load Da : Ball Dia n : Number of Circuits K : Stiffness(Kg/μm) Ca : Basic dynamic Rating Load (Kgf) Coa : Basic Static Rating Load(Kgf)

Model No.	Dimensions															
	d	I	Da	D	A	B	L	W	X	G	H	Q	n	Ca	Coa	K
DFU1604-4	16	4	2.381	28	48	10	80	38	5.5	44	40	M6	4	629	1270	35
DFU1605-4		5	3.175	28	48	10	100	38	5.5	44	40	M6	4	780	1790	20
★ DFU1610-3		10	3.175	28	48	10	118	38	5.5	44	40	M6	3	721	1249	15
DFU-2004-4	20	4	2.381	36	58	10	80	47	6.6	51	44	M6	4	699	1617	41
★ DFU-2005-4		5	3.175	36	58	10	101	47	6.6	51	44	M6	4	1130	2380	25
DFU-2504-4	25	4	2.381	40	62	10	80	51	6.6	55	48	M6	4	777	2052	48
★ DFU-2505-4		5	3.175	40	62	10	101	51	6.6	55	48	M6	4	1280	3110	35
DFU-2506-4		6	3.969	40	62	10	105	51	6.6	55	48	M6	4	1528	3284	40
DFU-2508-4		8	4.762	40	62	10	120	51	6.6	55	48	M6	4	1941	3863	38
DFU-2510-4		10	4.762	40	62	12	145	51	6.6	55	48	M6	4	1944	3877	33
DFU-3204-4	32	4	2.381	50	80	12	80	65	9	71	62	M6	4	871	2661	56
★ DFU-3205-4		5	3.175	50	80	12	102	65	9	71	62	M6	4	1450	4150	40
DFU-3206-4		6	3.969	50	80	12	105	65	9	71	62	M6	4	1720	4298	47
DFU-3208-4		8	4.762	50	80	12	122	65	9	71	62	M6	4	2189	5079	44
DFU-3210-4		10	6.350	50	80	12	162	65	9	71	62	M6	4	3390	7170	79
★ DFU-4005-4	40	5	3.175	63	93	14	105	78	9	81.5	70	M8	4	1610	5330	49
DFU-4006-4		6	3.969	63	93	14	108	78	9	81.5	70	M6	4	1911	5458	55
DFU-4008-4		8	4.762	63	93	14	132	78	9	81.5	70	M6	4	2435	6469	52
★ DFU-4010-4		10	6.350	63	93	14	165	78	9	81.5	70	M8	4	3910	9520	50
DFU-5010-4	50	10	6.350	75	110	16	171	93	11	97.5	85	M8	4	4450	12500	65
★ DFU-6310-4	63	10	6.350	90	125	18	182	108	11	110	95	M8	4	5070	16600	80
★ DFU-8010-4	80	10	6.350	105	145	20	182	125	13.5	127.5	110	M8	4	5620	21300	90

Note:with sign ★ can produce left helix

TYPE:SFT

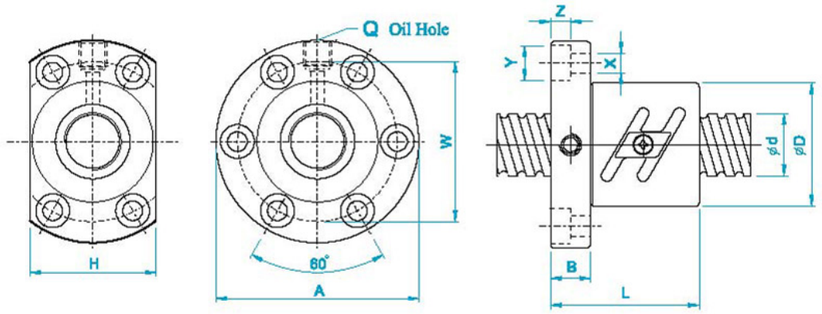

Unit: mm

I : Load Da : Ball Dia n : Number of Circuits K : Stiffness(Kg/μm) Ca : Basic dynamic Rating Load (Kgf) Coa : Basic Static Rating Load(Kgf)

Model No.	Dimensions																
	d	I	Da	D	A	B	L	W	H	X	Y	Z	Q	n	Ca	Coa	K
SFT2005-5	20	5	3.175	44	67	11	57	55	52	5.5	9.5	5.5	M6	2.5x2	1546	3068	37
SFT2505-5	25	5	3.175	50	73	11	55	61	52	5.5	9.5	5.5	M8	2.5x2	1690	4460	46
SFT2510-2.5		10	6.350	68	102	15	70	84	82	9	14	8.5	M8	2.5x1	2440	4730	26
SFT3205-5	32	5	3.175	58	85	12	56	71	64	6.6	11	6.5	M8	2.5x2	1880	5720	55
SFT3206-5		6	3.969	62	89	12	65	75	68	6.6	11	6.5	M8	2.5x2	2520	7080	56
SFT3208-5		8	4.762	66	100	15	82	82	76	9	14	8.5	M8	2.5x2	3230	8360	58
SFT3210-5		10	6.350	74	108	15	96	90	82	9	14	9	M8	2.5x2	4820	11500	63
SFT3220-2.5		20	6.350	74	108	16	100	90	82	9	14	8.5	M8	2.5x1	2680	6020	30
SFT4005-5	40	5	3.175	67	101	15	59	83	72	9	14	8.5	M8	2.5x2	2026	7200	66
SFT4010-5		10	6.350	82	124	18	100	102	94	11	17.5	11	M8	2.5x2	5300	14000	72
SFT4020-2.5		20	6.350	82	124	18	100	102	90	11	17.5	11	M8	2.5x1	2970	7370	38
SFT5010-5	50	10	6.350	93	135	18	103	113	98	11	17.5	11	M8	2.5x2	5940	18000	89
SFT5020-2.5		20	9.525	105	152	28	121	128	110	14	20	13	M8	2.5x1	7400	18700	45
SFT6310-5	63	10	6.350	108	154	22	105	130	110	14	20	13	M8	2.5x2	6550	22700	107
SFT6320-2.5		20	9.525	122	180	28	127	150	130	18	26	18	M8	2.5x1	8110	23200	73
SFT8010-5	80	10	6.350	130	176	22	105	152	132	14	20	13	M8	2.5x2	7200	28900	129
SFT8020-5		20	9.525	143	204	28	180	172	148	18	26	18	M8	2.5x2	16700	60100	175
SFT8020-7.5		20	9.525	143	204	28	240	172	148	18	26	18	M8	2.5x3	23500	89100	252

TYPE:DFT

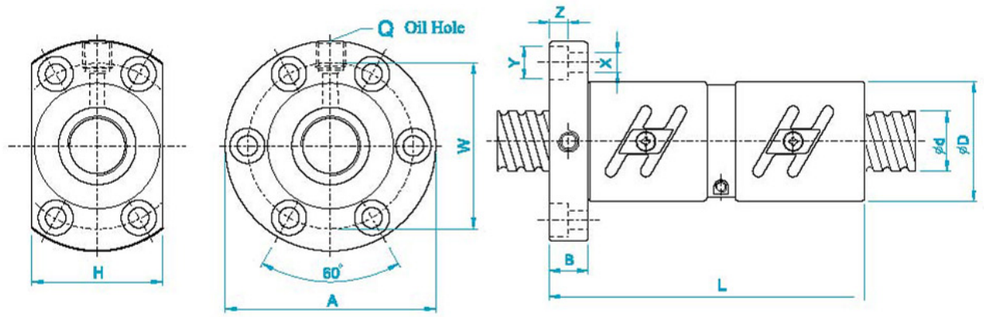

Unit: mm

I : Load Da : Ball Dia n : Number of Circuits K : Stiffness(Kg/μm) Ca : Basic dynamic Rating Load (Kgf) Coa : Basic Static Rating Load(Kgf)

Model No.	Dimensions																
	d	I	Da	D	A	B	L	W	H	X	Y	Z	Q	n	Ca	Coa	K
DFT2005-5	20	5	3.175	44	67	11	105	55	52	5.5	9.5	5.5	M6	2.5x2	1546	3068	75
DFT2505-5	25	5	3.175	50	73	11	105	61	52	5.5	9.5	5.5	M8	2.5x2	1690	4460	89
DFT2510-2.5		10	6.350	68	102	15	130	84	82	9	14	8.5	M8	2.5x1	2440	4730	48
DFT3205-5	32	5	3.175	58	85	12	106	71	64	6.6	11	6.5	M8	2.5x2	1880	5720	108
DFT3206-5		6	3.969	62	89	12	123	75	68	6.6	11	6.5	M8	2.5x2	2520	7080	111
DFT3208-5		8	4.762	66	100	15	154	82	76	9	14	8.5	M8	2.5x2	3230	8360	113
DFT3210-5		10	6.350	74	108	16	187	90	82	9	14	8.5	M8	2.5x2	4820	11500	117
DFT3220-2.5		20	6.350	74	108	16	198	90	82	9	14	8.5	M8	2.5x1	2680	6020	60
DFT4005-5	40	5	3.175	67	101	15	109	83	72	9	14	8.5	M8	2.5x2	2060	7200	130
DFT4010-5		10	6.350	82	124	18	188	102	94	11	17.5	11	M8	2.5x2	5300	14000	141
DFT4020-2.5		20	6.350	82	124	18	200	102	90	11	17.5	11	M8	2.5x1	2970	7370	75
DFT5010-5	50	10	6.350	93	135	18	193	113	98	11	17.5	11	M8	2.5x2	5940	18000	170
DFT5020-2.5		20	9.525	105	152	28	225	128	110	14	20	13	M8	2.5x1	7400	18700	90
DFT6310-5	63	10	6.350	108	154	22	197	130	110	14	20	13	M8	2.5x2	6550	22700	200
DFT8010-5	80	10	6.350	130	176	22	195	152	132	14	20	13	M8	2.5x2	7200	28900	240
DFT8020-5		20	9.525	143	204	28	340	172	148	18	26	18	M8	2.5x2	16700	60100	330

TYPE:SFE

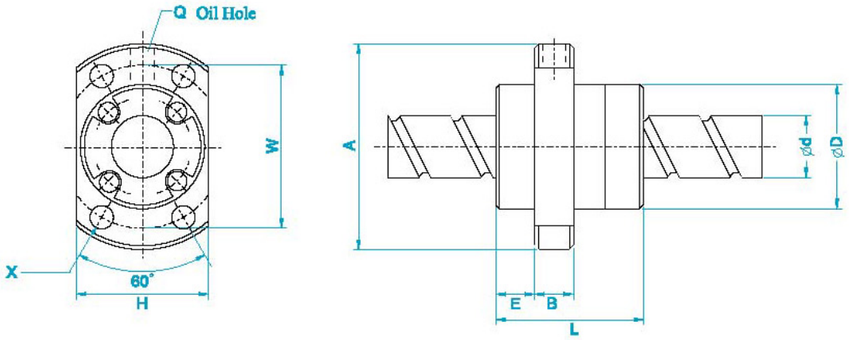

Unit: mm

I : Load Da : Ball Dia n : Number of Circuits K : Stiffness(Kg/μm) Ca : Basic dynamic Rating Load (Kgf) Coa : Basic Static Rating Load(Kgf)

Model No.	Dimensions															
	d	I	Da	D	A	E	B	L	X	W	H	Q	n	Ca	Coa	K
SFE1616-3	16	16	2.778	32	53	9.6	10	38	4.5	42	34	M6	1.7x2	650	1280	19
SFE1616-6		16	2.778	32	53	9.6	10	38	4.5	42	34	M6	1.7x4	1180	2550	36
SFE2020-3	20	20	3.175	39	62	11.5	10	47	5.5	50	41	M6	1.7x2	980	2140	25
SFE2020-6		20	3.175	39	62	11.5	10	47	5.5	50	41	M6	1.7x4	1780	4280	49
SFE2525-3	25	25	3.969	47	74	13	12	57	6.6	60	49	M6	1.7x2	1470	3350	31
SFE2525-6		25	3.969	47	74	13	12	57	6.6	60	49	M6	1.7x4	2660	6690	60
SFE3232-3	32	32	4.762	58	92	16	12	71	9	74	60	M6	1.7x2	2140	5260	40
SFE3232-6		32	4.762	58	92	16	12	71	9	74	60	M6	1.7x4	3890	10500	76
SFE4040-3	40	40	6.350	73	114	19	15	89	11	93	75	M6	1.7x2	3410	8820	49
SFE4040-6		40	6.350	73	114	19	15	89	11	93	75	M6	1.7x4	6200	17600	95
SFE5050-3	50	50	7.938	90	135	21.5	20	107	14	112	92	M6	1.7x2	5100	13800	60
SFE5050-6		50	7.938	90	135	21.5	20	107	14	112	92	M6	1.7x4	7260	27600	117

Note 1:"-3" means 2starts, "-6" means 4 start.

Note 2: ABBA standard nuts do not have wipers, if required, please advise.

TYPE:SFK

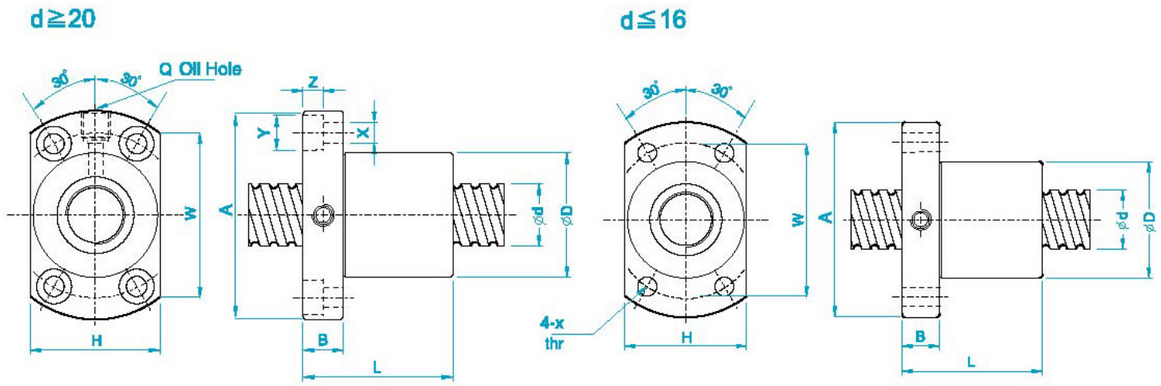

Unit: mm

I : Load Da : Ball Dia n : Number of Circuits K : Stiffness(Kg/μm) Ca : Basic dynamic Rating Load (Kgf) Coa : Basic Static Rating Load(Kgf)

Model No.	Dimensions															
	d	I	Da	D	A	B	L	W	H	X	Y	Z	Q	n	Ca	Coa
SFK0401	4	1	0.8	10	20	3	12	15	14	2.9				2	42	51
SFK0601	6	1	0.8	12	24	3.5	15	18	16	3.4				3	73	121
SFK0801	8	1	0.8	14	27	4	16	21	18	3.4				4	93	173
SFK0802		2	1.2	14	27	4	16	21	18	3.4				3	135	225
SFK082.5		2.5	1.2	16	29	4	26	23	20	3.4				3	177	278
SFK1002	10	2	1.2	18	35	5	28	27	22	4.5				3	185	305
SFK1004		4	2	26	46	10	34	36	28	4.5				3	395	590
SFK1202	12	2	1.2	20	37	5	28	29	24	4.5				4	173	317
SFK1204		4	2.5	24	40	6	28	32	25	3.5				3	454	722
SFK1205		5	2.5	22	37	8	39	29	24	4.5				3	619	883
SFK1402	14	2	1.2	21	40	6	23	31	26	5.5				4	287	633
SFK1602	16	2	1.2	25	43	10	40	35	29	5.5				4	253	670
SFK2002	20	2	1.2	50	80	15	55	65	68	6.5	10.5	6	M6	6	397	1269
SFK2502	25	2	1.2	50	80	13	43	65	68	6.5	10.5	6	M6	5	375	1331
SFK2503		3	2.381	40	63	11	51	51	48	5.5	9.5	5.5	M6	6	1100	3076

Note:1 Nuts do not have seals from ø4 to ø6.

Note:2 ABBA Standard nuts are no wipers, if required, please advise.

Note:3 Nuts do not have oil hole from ø4 to ø16.

TYPE:SCI

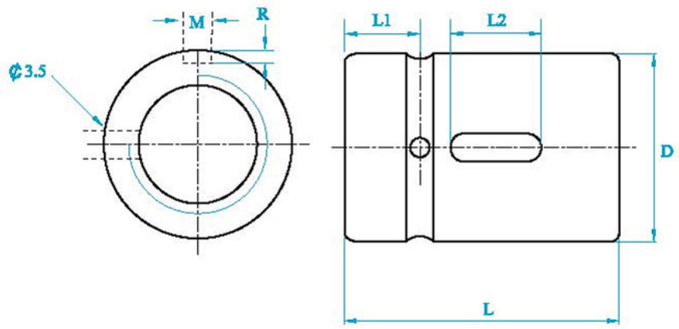

Unit: mm

I : Load	Da : Ball Dia	n : Number of Circuits	K : Stiffness(Kg/μm)	Ca : Basic dynamic Rating Load (Kgf)	Coa : Basic Static Rating Load(Kgf)

Model No.	Dimensions												
	d	I	Da	D	L	L1	L2	M	R	n	Ca	Coa	K
SCI-1604	16	4	2.381	30	40	9	15	3	1.5	4	640	1340	16
SCI-1605		5	3.175	30	45	9	20	5	3	4	780	1790	20
SCI-2004	20	4	2.381	34	40	9	15	3	1.5	4	670	1480	25
★ SCI-2005		5	3.175	34	45	9	20	5	3	4	1130	2380	25
SCI-2504	25	4	2.381	40	40	9	15	3	1.5	4	760	1950	31
★ SCI-2505		5	3.175	40	45	9	20	5	3	4	1280	3110	35
SCI-2510		10	4.762	46	85	13	30	5	3	4	1944	3877	33
SCI-3204	32	4	2.381	46	40	9	15	3	1.5	4	860	3050	40
★ SCI-3205		5	3.175	46	45	9	20	5	3	4	1450	4150	40
SCI-3210		10	6.35	54	85	13	30	5	3	4	3390	7170	40
★ SCI-4005	40	5	3.175	56	45	9	20	5	3	4	1610	5330	49
★ SCI-4010		10	6.35	62	85	13	30	5	3	4	3910	9520	50
SCI-5010	50	10	6.35	72	85	13	30	5	3	4	4450	12500	65
★ SCI-6310	63	10	6.35	85	85	13	30	6	3.5	4	5070	16600	80
★ SCI-8010	80	10	6.35	105	85	13	30	8	4.5	4	5620	21300	90

Note:with sign ★ can produce left helix

TYPE:SFM&DFM

Used for Milling Machine Only

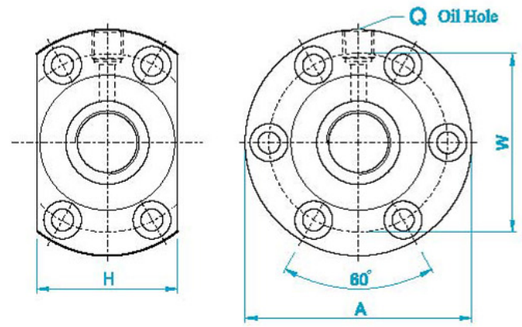

SFM

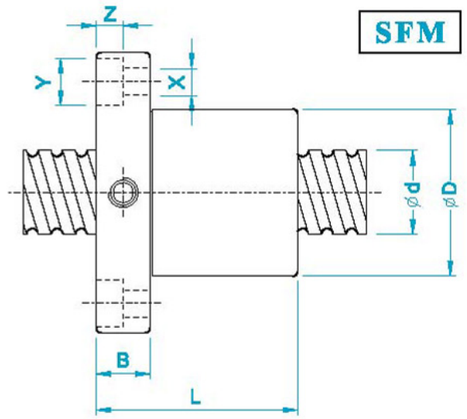

DFM

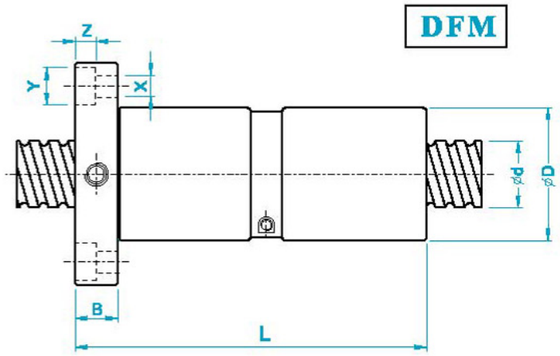

Unit: mm

I : Load	Da : Ball Dia	n : Number of Circuits	K : Stiffness(Kg/μm)	Ca : Basic dynamic Rating Load (Kgf)	Coa : Basic Static Rating Load(Kgf)

Model No.	Dimensions																
	d	I	Da	D	A	B	L	W	H	X	Y	Z	Q	n	Ca	Coa	K
★ SFM3205-4	32	5	3.175	48	74	12	52	60	60	6.5	11	6.5	M8	4	1450	4150	40
★ SFM325T-4	32	5.08	3.175	48	74	12	53	60	60	6.5	11	6.5	M8	4	1450	4150	40
★ DFM3205-4	32	5	3.175	48	74	12	102	60	60	6.5	11	6.5	M8	4	1450	4150	72
★ DFM325T-4	32	5.08	3.175	48	74	12	104	60	60	6.5	11	6.5	M8	4	1450	4150	72

Note:with sign ★ can produce left helix

ABBA LinearTech

Support Unit of Ball Screw

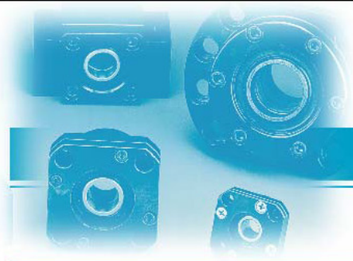

Recommended Shaft End Shape

For Support Unit Type BK and FK and EK Fixed Side

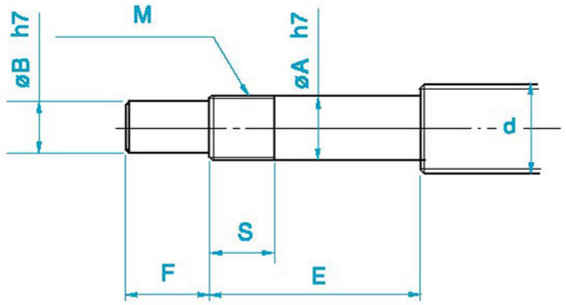

Unit : mm

Support Unit model No.	Ball Screw shaft OD	Shaft Support Portion OD				Metric screw thread	
BK (Type BK)	d	A	B	E	F	M	S
BK 10	12/14/15	10	8	39	15	M10X1	16
BK 12	16/18	12	10	39	15	M12X1	14
BK 15	20	15	12	40	20	M15X1	12
BK 17	25	17	15	53	23	M17X1	17
BK 20	28/30/32	20	17	53	25	M20X1	15
BK 25	36	25	20	65	30	M25X1.5	18
BK 30	40	30	25	72	38	M30X1.5	25
BK 35	45	35	30	83	45	M35X1.5	28
BK 40	50/55	40	35	98	50	M40X1.5	35

Unit : mm

Support Unit model No.		Ball Screw shaft OD	Shaft Support Portion OD				Metric screw thread	
Type FK	Type EK	d	A	B	E	F	M	S
FK 6	EK 6	8	6	4	30	8	M6X0.75	8
FK 8	EK 8	10/12	8	6	35	9	M8X1	10
FK 10	EK 10	12/14/15	10	8	36	15	M10X1	11
FK 12	EK 12	14/15/16	12	10	36	15	M12X1	11
FK 15	EK 15	18/20	15	12	49	20	M15X1	13
FK 20	EK 20	25/28/30	20	17	64	25	M20X1	17
FK 25	–	30/32/36	25	20	76	30	M25X1.5	20
FK 30	–	36/40	30	25	72	38	M30X1.5	25

Recommended Shaft End Shape

For Support Unit Type FF and EF and BF (Floated Side)

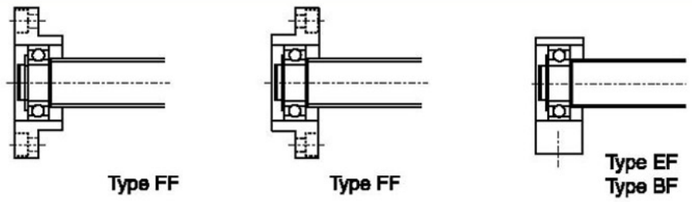

Unit : mm

Support Unit model No.			Ball Screw shaft OD	Shaft Support Portion OD	
Type FF	Type EF	Type BF	d	A	E
FF 06	EF 06	–	8	6	9
FF 10	EF 10	BF 10	12/14/15	8	10
FF 12	EF 12	BF 12	14/15/16	10	11
FF 15	EF 15	BF 15	18/20	15	13
–	–	BF 17	20/25	17	16
FF 20	EF 20	(BF20)Note	25/28/30	20	19 (16)
FF 25	–	BF 25	30/32/36	25	20
FF 30	–	BF 30	36/40	30	21
–	–	BF 35	40/45	35	22
–	–	BF 40	50	40	23

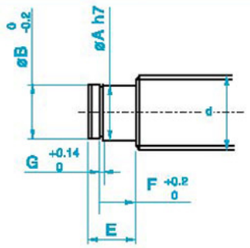

Note:
In this table,dimensions in parentheses are those of type BF20. These dimensions differ from those of type FF20 and EF20.When placing an order,always specify the model number of the Support Unit to be used.

Unit : mm

Support Unit model No.			Snap-ring Groove		
Type FF	Type EF	Type BF	B	F	G
FF 06	EF 06		5.7	6.8	0.8
FF 10	EF 10	BF 10	7.6	7.9	0.9
FF 12	EF 12	BF 12	9.6	9.15	1.15
FF 15	EF 15	BF 15	14.3	10.15	1.15
–	–	BF 17	16.2	13.15	1.15
FF 20	EF 20	(BF20)Note	19	15.35(13.35)	1.35
FF 25	–	BF 25	23.9	16.35	1.35
FF 30	–	BF 30	28.6	17.75	1.75
–	–	BF 35	33	18.75	1.75
–	–	BF 40	38	19.95	1.95

FK Fixed Side

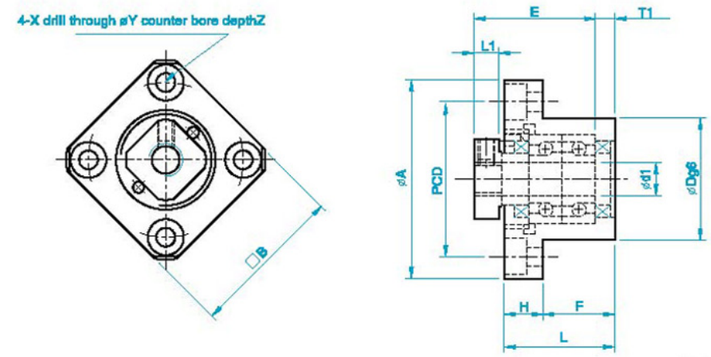

Unit : mm

Model No.	d1	L	H	F	E	Dg6	A	PCD	B	L1	T1	X	Y	Z
FK 5	5	16.5	6	10.5	18.5	20	34	26	26	5.5	3.5	3.4	6.5	4
FK 6	6	20	7	13	22	22	36	28	28	5.5	3.5	3.4	6.5	4
FK 8	8	23	9	14	26	28	43	35	35	7	4	3.4	6.5	4
FK 10	10	27	10	17	29.5	34	52	42	42	7.5	5	4.5	8	4
FK 12	12	27	10	17	29.5	36	54	44	44	7.5	5	4.5	8	4
FK 15	15	32	15	17	36	40	63	50	52	10	6	5.5	9.5	6
FK 20	20	52	22	30	50	57	85	70	68	8	10	6.6	11	10
FK 25	25	57	27	30	60	63	98	80	79	13	10	9	15	13
FK 30	30	62	30	32	61	75	117	95	93	11	12	11	17.5	15

FF Floated Side

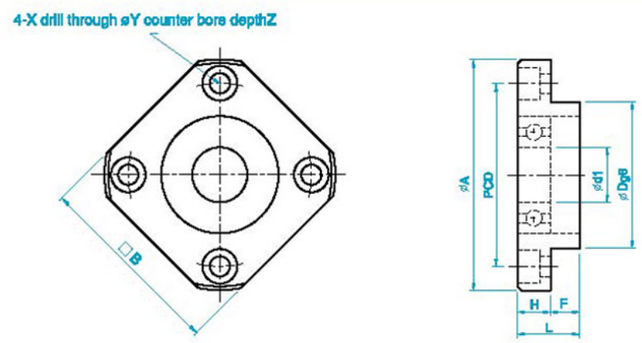

Unit : mm

Model No.	d1	L	H	F	Dg6	A	PCD	B	X	Y	Z
FF 10	8	12	7	5	28	43	35	35	3.4	6.5	4
FF 12	10	15	7	8	34	52	42	42	4.5	8	4
FF 15	15	17	9	6	40	63	50	52	5.5	9.5	5.5
FF 20	20	20	11	9	57	85	70	68	6.6	11	6.5
FF 25	25	24	14	10	63	98	80	79	9	14	8.5
FF 30	30	27	18	9	75	117	95	93	11	17.5	11

BK Fixed Side

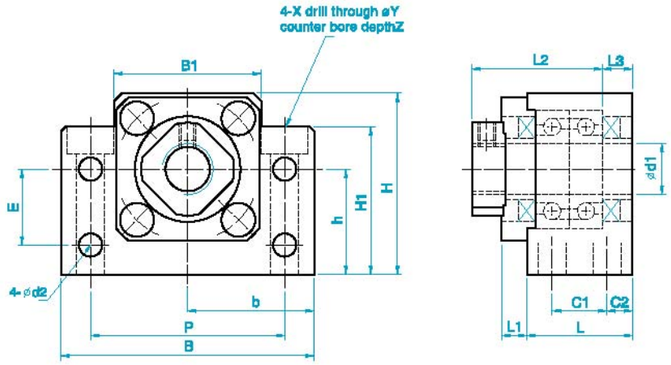

Unit : mm

Model No.	d1	L	L1	L2	L3	C1	C2	B	H	$b^{\pm0.02}$	$h^{\pm0.02}$	B1	H1	E	P	d2	X	Y	Z
BK 10	10	25	5	29	5	13	6	60	39	30	22	34	32.5	15	46	5.5	6.6	10.8	5
BK 12	12	25	5	29	5	13	6	60	43	30	25	35	32.5	18	46	5.5	6.6	10.8	1.5
BK 15	15	27	6	32	6	15	6	70	48	35	28	40	38	18	54	5.5	6.6	11	6.5
BK 17	17	35	9	44	7	19	8	86	64	43	39	50	55	28	68	6.6	9	14	8.5
BK 20	20	35	8	43	8	19	8	88	60	44	34	52	50	22	70	6.6	9	14	8.5
BK 25	25	42	12	54	9	22	10	106	80	53	48	64	70	33	85	9	11	17.5	11
BK 30	30	45	14	61	9	23	11	128	89	64	51	76	78	33	102	11	14	20	13
BK 35	35	50	14	67	12	26	12	140	96	70	52	88	79	35	114	11	14	20	13
BK 40	40	61	18	76	15	33	14	160	110	80	60	100	90	37	130	14	18	26	17.5

EK Fixed Side

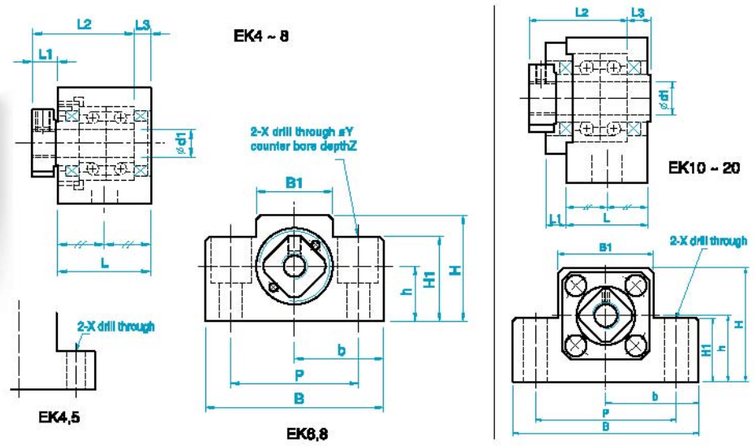

Unit : mm

Model No.	d1	L	L1	L2	L3	B	H	$b^{\pm0.02}$	$h^{\pm0.02}$	B1	H1	P	X	Y	Z
EK 5	5	16.5	5.5	18.5	3.5	36	21	18	11	20	8	28	4.5	–	–
EK 6	6	20	5.5	22	3.5	42	25	21	13	18	20	30	5.5	9.5	11
EK 8	8	23	7	26	4	52	32	26	17	25	26	38	6.6	11	12
EK 10	10	24	6	29.5	6	70	43	35	25	36	24	52	9	–	–
EK 12	12	24	6	29.5	6	70	43	35	25	36	24	52	9	–	–
EK 15	15	25	6	36	5	80	49	40	30	41	25	60	11	–	–
EK 20	20	42	10	50	10	95	58	47.5	30	56	25	75	11	–	–

BF Floated Side

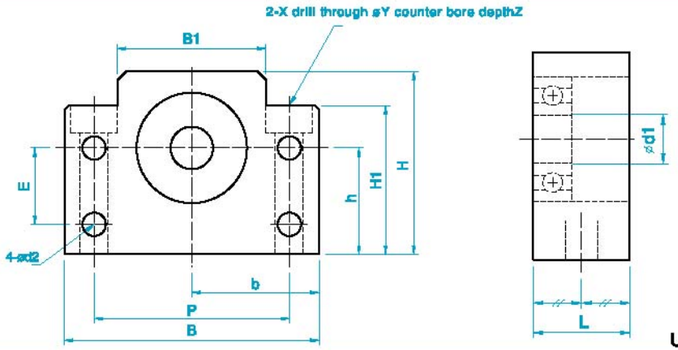

Unit : mm

Model No.	d1	L	B	H	$b^{\pm0.02}$	$h^{\pm0.02}$	B1	H1	E	P	d2	X	Y	Z
BF 10	8	20	60	39	30	22	34	32.5	15	46	5.5	6.6	10.8	5
BF 12	10	20	60	43	30	25	35	32.5	18	46	5.5	6.6	10.8	1.5
BF 15	15	20	70	48	35	28	40	38	18	54	5.5	6.6	11	6.5
BF 17	17	23	86	64	43	39	50	55	28	68	6.6	9	14	8.5
BF 20	20	26	88	60	44	34	52	50	22	70	6.6	9	14	8.5
BF 25	25	30	106	80	53	48	64	70	33	85	9	11	17.5	11
BF 30	30	32	128	89	64	51	76	78	33	102	11	14	20	13
BF 35	35	32	140	96	70	52	88	79	35	114	11	14	20	13
BF 40	40	37	160	110	80	60	100	90	37	130	14	18	26	17.5

EF Floated Side

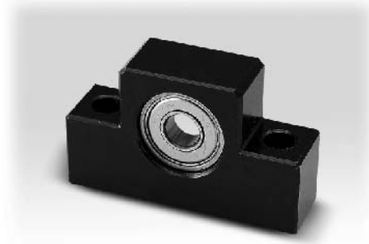

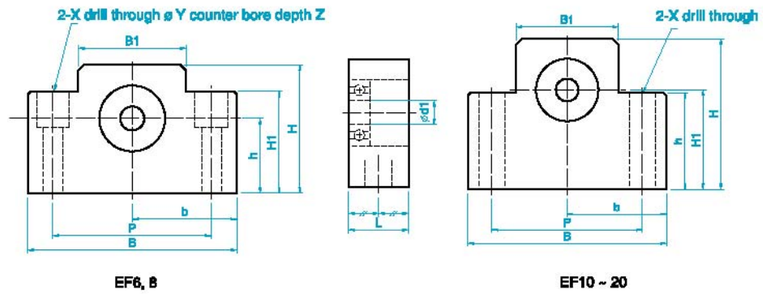

Unit : mm

Model No.	d1	L	B	H	$b^{\pm0.02}$	$h^{\pm0.02}$	B1	H1	P	X	Y	Z
EF 6	6	12	42	25	21	13	18	20	30	5.5	9.5	11
EF 8	6	14	52	32	26	17	25	26	38	6.6	11	12
EF 10	8	20	70	43	35	25	36	24	52	9	–	–
EF 12	10	20	70	43	35	25	36	24	52	9	–	–
EF 15	15	20	80	49	40	30	41	25	60	9	–	–
EF 20	20	26	95	58	47.5	30	56	25	75	11	–	–

ABBA LinearTech

Linear Ball Bearing Series

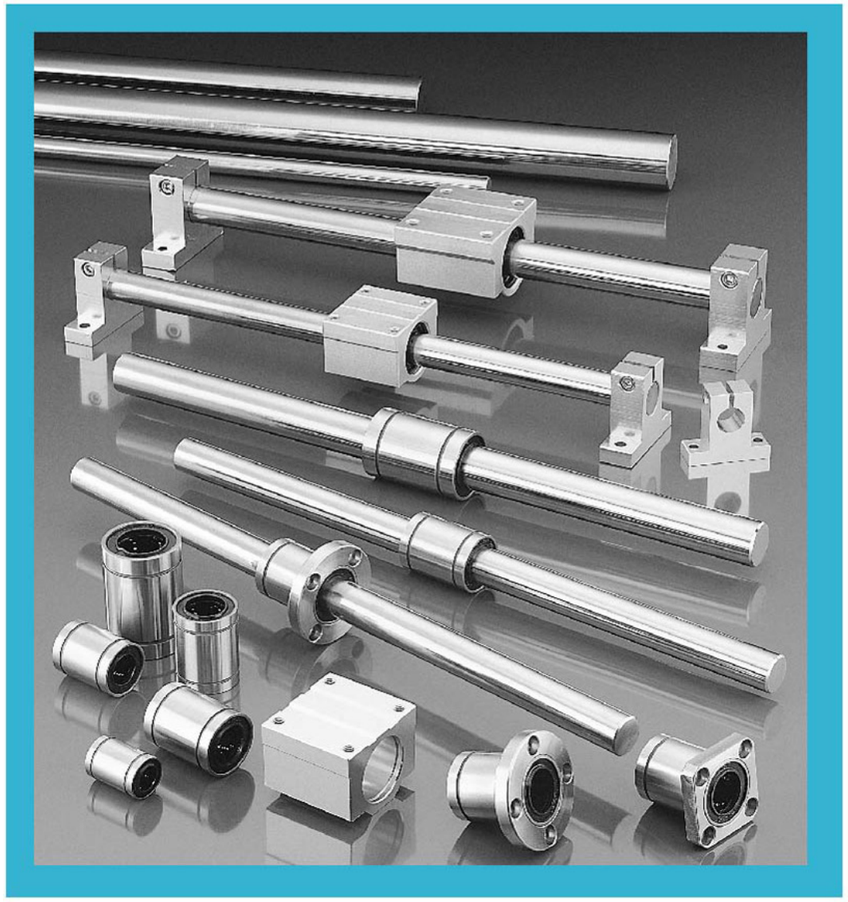

SF/WV series

SF : Harden and ground
WV: Harden ground and Chromium plated

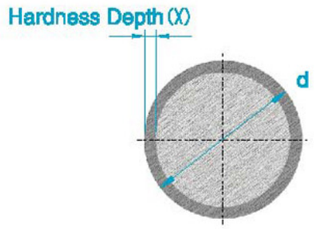

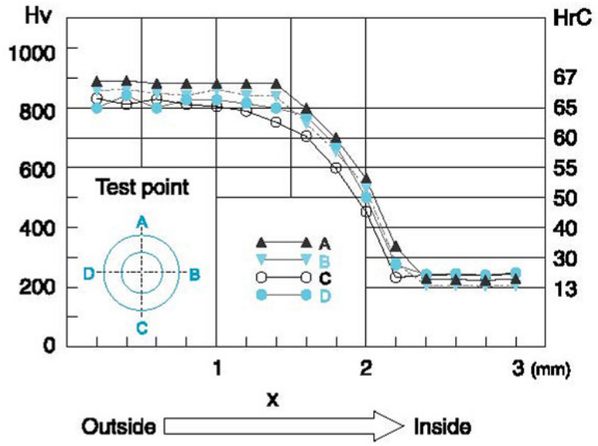

Material : CF53 Hardness : HrC60Up
Surface finish : Ra 0.15 - 0.35 μm
Shaft straightness : approx. 0.1 mm/m

Unit : mm

	Model No.	d	Length											Hardness Depth (X)
			1500	2000	2500	3000	3500	4000	4500	5000	5500	6000	6500	
★	SF4	4												1.0
★	SF6	6												1.0
★	SF8	8												1.0
★	SF10	10												1.0
★	SF12	12												1.6
★	SF16	16												1.6
★	SF20	20												2.2
★	SF25	25												2.2
★	SF30	30												2.2
★	SF32	32												2.2
★	SF40	40												3.5
★	SF50	50												3.5

Note:With sign ★ can supply Chromium plated slide shaft (Model No:WV)

LM series

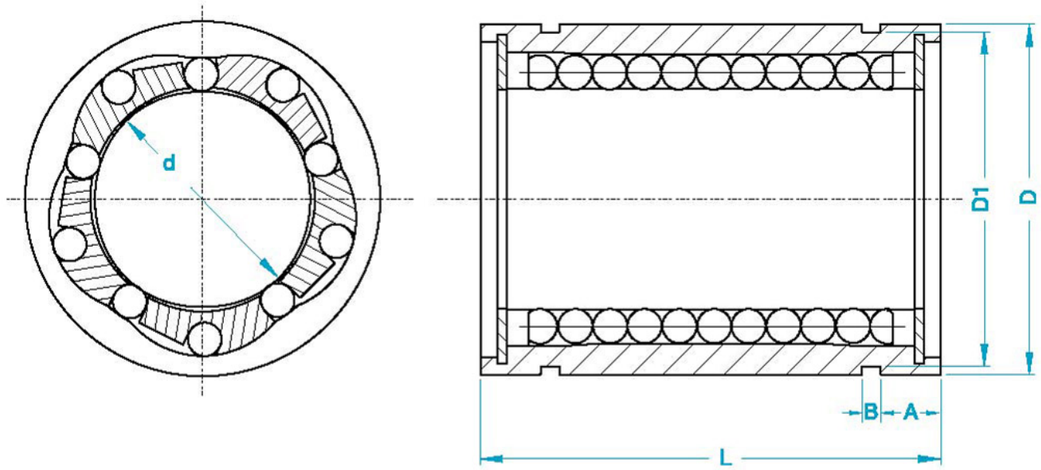

Unit : mm

Model No.	Basic Dimension							Eccentricity (max) µm	Radial Clearance (max) µm	(Kgf) Load		Weight (g)
	d	D	tolerance (µm)	L	tolerance (µm)	B	D1			Ca	Coa	
LM4UU	4	8	0 -11	12	0 -0.2	–	–	8	-5	9	13	2
LM6UU	6	12		19		1.1	11.5	12	-5	20	27	8
LM8UU	8	15		24		1.1	14.3	12	-5	27	41	16
LM10UU	10	19	0 -13	29		1.3	18	12	-5	38	55	30
LM12UU	12	21		30		1.3	20	12	-5	42	60	31.5
LM16UU	16	28	0 -15	37		1.6	27	12	-7	78	119	69
LM20UU	20	32		42		1.6	30.5	15	-9	83	140	87
LM25UU	25	40		59	0 -0.3	1.85	38	15	-9	100	159	220
LM30UU	30	45		64		1.85	43	15	-9	159	279	250
LM40UU	40	60	0 -19	80		2.1	57	20	-13	219	409	585
LM50UU	50	80		100		2.6	76.5	20	-13	389	808	1580

Note : UU with oil seals in ends

ABBA Linear Ball Bearing and Accessory
Standard Type

LM-L series

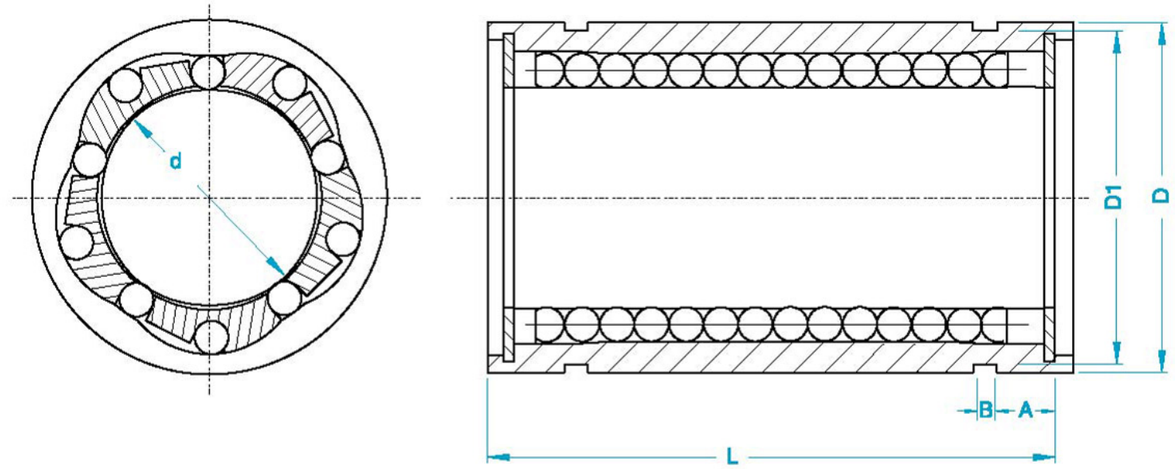

Unit : mm

Model No.	Basic Dimension							(Kgf) Load		Weight (g)
	d	D	tolerance (µm)	L	tolerance (µm)	B	D1	Ca	Coa	
LM6LUU	6	12	0 -13	35	0 -30	1.1	11.5	32	53	16
LM8LUU	8	15		45		1.1	14.3	44	80	31
LM10LUU	10	19	0 -16	55		1.1	18	59	112	62
LM12LUU	12	21		57		1.3	20	66	122	80
LM16LUU	16	28		70		1.3	27	125	240	145
LM20LUU	20	32	0 -19	80	0 -40	1.6	30.5	143	280	180
LM25LUU	25	40		112		1.85	38	159	320	440
LM30LUU	30	45		123		1.85	43	254	560	580
LM40LUU	40	60	0 -22	151		2.1	57	350	820	1170
LM50LUU	50	80		192		2.6	76.5	620	1622	3100

Note : UU with oil seals in ends

LF series

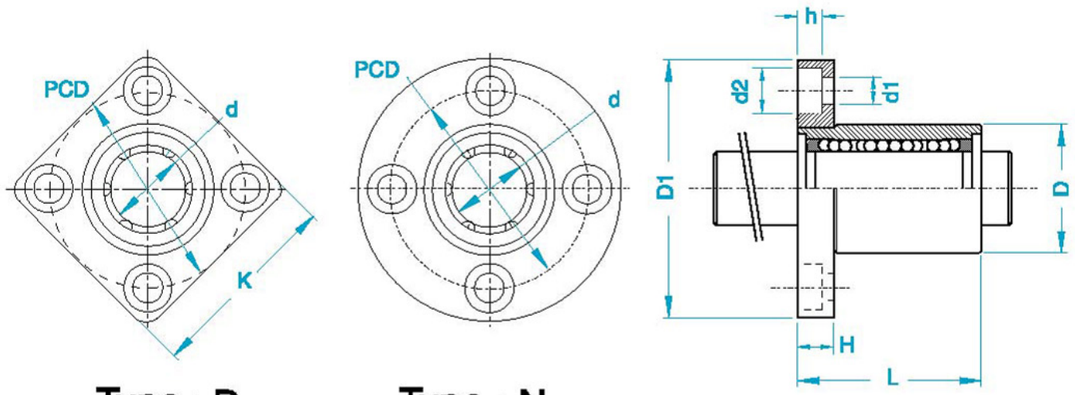

Type : D Type : N

Unit : mm

Model No.	Basic Dimension													Eccentricity (max) µm	Radial Clearance (max) µm	(Kgf) Load		Weight (g)
	d	D	tolerance (µm)	L	tolerance (µm)	D1	tolerance (µm)	H	PCD	K	d1	d2	h			Ca	Coa	
LF6UU	6	12	0-11	19	0 -20	28	0 -0.2	5	20	22	3.4	6.5	3.3	12	-5	200	206	26.5
LF8UU	8	15	0 -13	24		32		5	24	25	3.4	6.5	3.3	12	-5	260	400	40
LF10UU	10	19		29		40		6	29	30	4.5	8	4.4	12	-5	370	540	78
LF12UU	12	21		30		42		6	32	32	4.5	8	4.4	12	-5	410	290	76
LF16UU	16	28	0 -16	37		48		6	38	37	4.5	8	4.4	12	-7	770	1170	134
LF20UU	20	32		42		54		8	43	42	5.5	9.5	5.4	15	-9	860	1370	180
LF25UU	25	40		59		62		8	51	50	5.5	9.5	5.4	15	-9	980	1560	340
LF30UU	30	45		64		74		10	60	58	6.6	11	6.5	15	-9	1560	2740	460
LF40UU	40	60	0	80	0	96	0	13	78	75	9	14	8.6	20	-13	2150	4010	1054
LF50UU	50	80	-19	100	-30	116	-0.3	13	98	92	9	14	8.6	20	-13	3820	7830	2200

Note : UU-with oil seals in ends

ABBA Linear Ball Bearing and Accessory
Flange Type

LF-L series

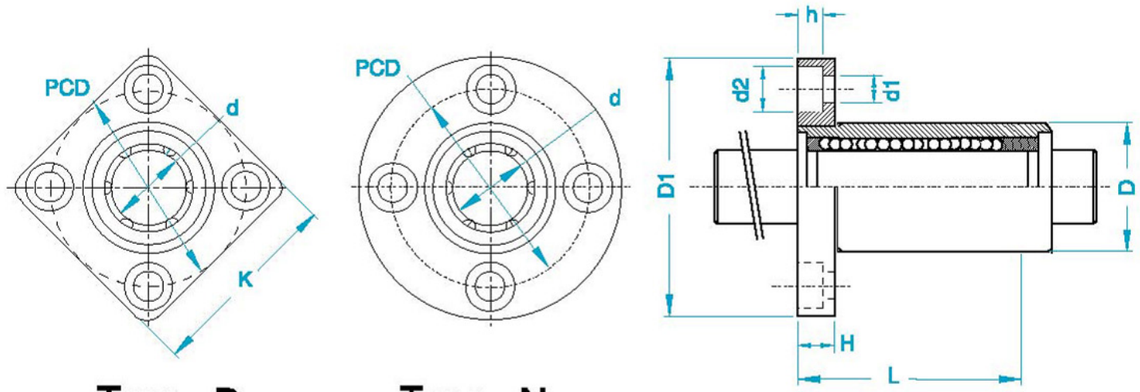

Type : D Type : N

Unit : mm

Model No.	Basic Dimension													Eccentricity (max) µm	Radial Clearance (max) µm	(Kgf) Load		Weight (g)
	d	D	tolerance (µm)	L	tolerance (µm)	D1	tolerance (µm)	H	PCD	K	d1	d2	h			Ca	Coa	
LF6LUU	6	12	0	35	0 -30	28	0 -0.2	5	20	22	3.4	6.5	3.3	12	-5	200	206	26.5
LF8LUU	8	15	-13	45		32		5	24	25	3.4	6.5	3.3	12	-5	260	400	40
LF10LUU	10	19	0 -16	55		40		6	29	30	4.5	8	4.4	12	-5	370	540	78
LF12LUU	12	21		57		42		6	32	32	4.5	8	4.4	12	-5	410	290	76
LF16LUU	16	28		70		48		6	38	37	4.5	8	4.4	12	-7	770	1170	134
LF20LUU	20	32	0 -19	80		54		8	43	42	5.5	9.5	5.4	15	-9	860	1370	180
LF25LUU	25	40		112		62		8	51	50	5.5	9.5	5.4	15	-9	980	1560	340
LF30LUU	30	45		123		74		10	60	58	6.6	11	6.5	15	-9	1560	2740	460
LF40LUU	40	60	0	151	0	96	0	13	78	75	9	14	8.6	20	-13	2150	4010	1054
LF50LUU	50	80	-22	192	-40	116	-0.3	13	98	92	9	14	8.6	20	-13	3820	7830	2200

Note : UU-with oil seals in ends

LU/LP series

LP:No Linear Ball Bearing (Housing Only)
LU:With Linear Ball Bearing (LP+LM)

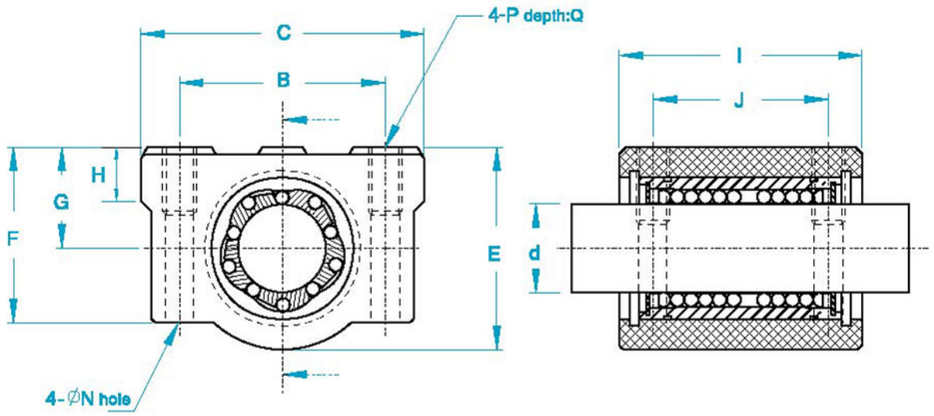

Material:Aluminum Alloy

Unit : mm

Model No.	Basic Dimension												weight (g)
	d	B	C	E	F	G±0.02	H	I	J	N	P	Q	
LU6UU LP6	6	20	30	18	15	9	6	25	15	M3	M4	8	34
LU8UU LP8	8	24	34	22	18	11	6	30	18	M3	M4	8	56
LU10UU LP10	10	28	40	26	21	13	8	35	21	M4	M5	12	90
LU12UU LP12	12	30.5	42	29	25	15	8	36	26	M4	M5	12	112
LU16UU LP16	16	36	50	38.5	35	19	9	44	34	M4	M5	12	189
LU20UU LP20	20	40	54	42	36	21	11	50	40	M5	M6	12	237
LU25UU LP25	25	54	76	51.5	41	26	12	67	50	M6	M8	18	555
LU30UU LP30	30	58	78	59.5	49	30	15	72	58	M6	M8	18	685
LU40UU LP40	40	80	102	78	62	40	20	90	60	M8	M10	25	1600
LU50UU LP50	50	100	122	102	80	52	25	110	80	M8	M10	25	3350

SS series

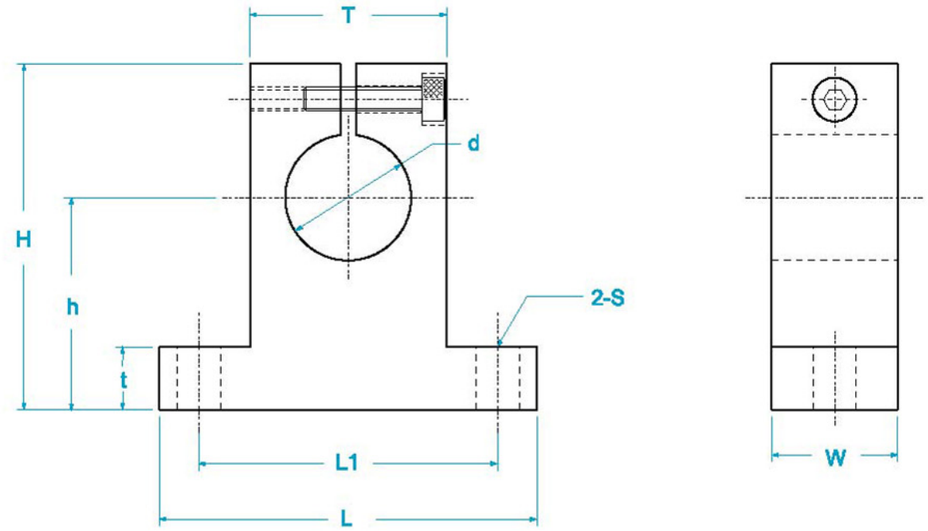

Unit : mm

Model No.	Basic Dimension									Weight (g)
	d	h	L	W	H	t	T	L1	S	
SS4	4	20	42	14	32.8	6	18	32	5.5	24
SS6	6	20	42	14	32.8	6	18	32	5.5	24
SS8	8	20	42	14	32.8	6	18	32	5.5	24
SS10	10	20	42	14	32.8	6	18	32	5.5	24
SS12	12	23	42	14	37.5	6	20	32	5.5	30
SS16	16	27	48	16	44	8	25	38	5.5	40
SS20	20	31	60	20	51	10	30	45	6.6	70
SS25	25	35	70	24	60	12	38	56	6.6	130
SS30	30	42	84	28	70	12	44	64	9	180
SS40	40	60	114	36	96	15	60	90	11	420
SS50	50	70	126	40	120	18	74	100	14	750

LME series

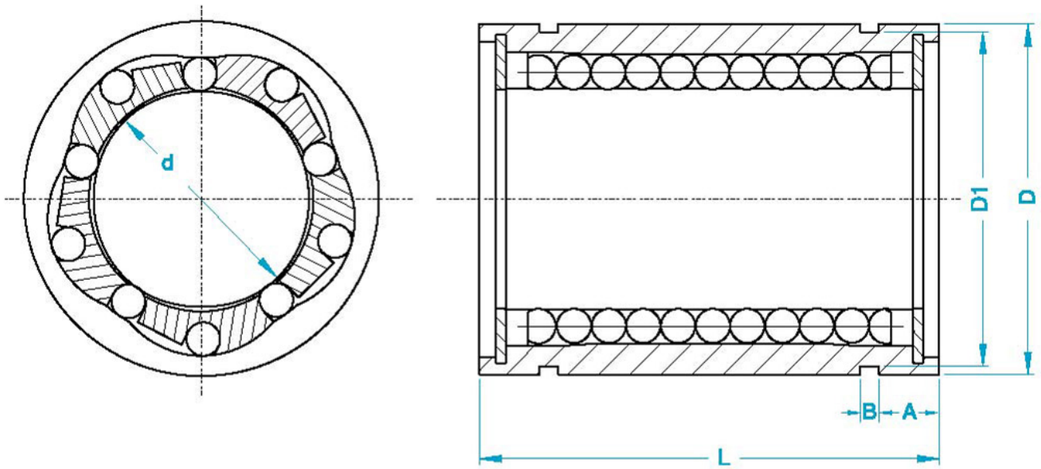

Unit : mm

Model No.	Basic Dimension							Eccentricity (max) µm	Radial Clearance (max) µm	(Kgf) Load		Weight (g)
	d	D	tolerance (µm)	L	tolerance (µm)	B	D1			Ca	Coa	
LME8UU	8	16	0/-8	25		1.1	15.2	12	-5	27	41	20
LME12UU	12	22	0	32	0	1.3	21	12	-7	51	78	41
LME16UU	16	26	-9	36	-20	1.3	24.9	12	-7	58	91	57
LME20UU	20	32	0	45		1.6	30.3	15	-9	88	139	91
LME25UU	25	40	-11	58		1.85	37.5	15	-9	100	159	215
LME30UU	30	47		68	0	1.85	44.5	15	-9	159	279	325
LME40UU	40	62	0	80	-30	2.15	59	17	-13	219	409	705
LME50UU	50	75	-13	100		2.65	72	17	-13	389	808	1130

Note : UU with oil seals in ends

LFE series

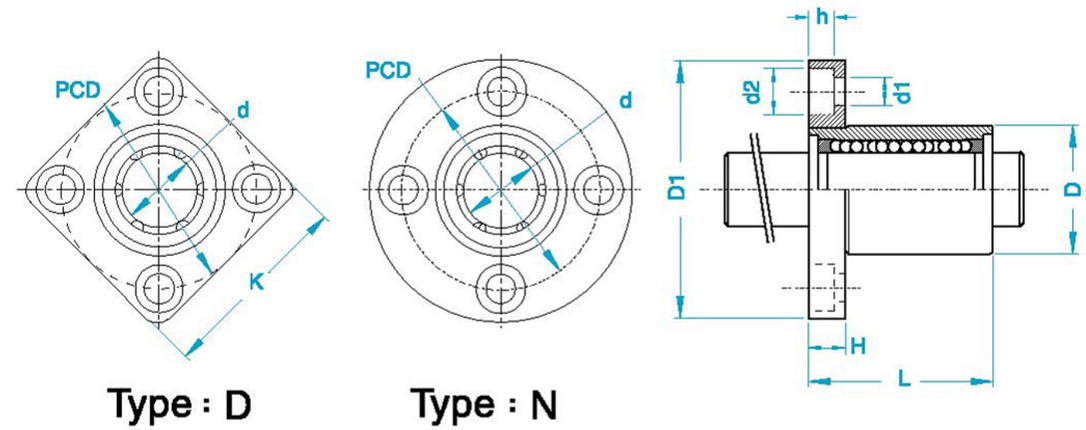

Unit : mm

Model No.	Basic Dimension													Eccentricity (max) µm	Radial Clearance (max) µm	(Kgf) Load		Weight (g)
	d	D	tolerance (µm)	L	tolerance (µm)	D1	tolerance (µm)	H	PCD	K	d1	d2	h			Ca	Coa	
LFE8UU	8	16	0/-8	25		32		5	24	25	3.4	6.5	3.3	12	-5	260	400	44
LFE12UU	12	22	0	32		42		6	32	32	4.5	8	4.4	12	-5	500	770	86
LFE16UU	16	26	-9	36	0	46	0	6	36	35	4.5	8	4.4	12	-7	570	890	120
LFE20UU	20	32	0	45	-20	54	-0.2	8	43	42	5.5	9.5	5.4	15	-9	860	1370	184
LFE25UU	25	40	-11	58		62		8	51	50	5.5	9.5	5.4	15	-9	980	1560	335
LFE30UU	30	47		68		76		10	62	60	6.6	11	6.5	15	-9	1560	2740	545
LFE40UU	40	62	0	80	0	98	0	13	80	75	9	14	8.6	20	-13	2150	4010	1185
LFE50UU	50	75	-13	100	-30	112	-0.3	13	94	88	9	14	8.6	20	-13	3820	7830	1730

Note : UU-with oil seals in ends